S-480-80

ATTACHMENT C to NAS5-32314

PERFORMANCE AND OPERATION SPECIFICATION

FOR THE EOS/METSAT INTEGRATED PROGRAMS

AMSU-A INSTRUMENT

MAY 1996

GODDARD SPACE FLIGHT CENTER
NATIONAL AERONAUTICS AND SPACE ADMINISTRATION
GREENBELT, MARYLAND

Check the POES Master Controlled Documents list at: http://poes.gsfc.nasa.gov/iso/baseline.pdf to verify that this is the correct version before use.

PERFORMANCE AND OPERATION SPECIFICATION

AMSU-A INSTRUMENT

Prepared under the direction of: Original Signed 12/23/94
S. Krimchansky Date
EOS/METSAT Project AMSU-A Instrument Manager

and Original Signed 12/28/94
M. Domen Date
EOS PM Project AMSU-A Instrument Manager

Approval: Original Signed 12/23/94
H. McCain Date
METSAT Project Manager, GSFC

Approval: Original Signed 1/3/95
M. Donohoe Date
EOS PM Project Manager, GSFC

Approval: Original Signed 5/14/96
W. E. Mazur, Jr. Date
NOAA Polar Satellite Acquisition Manager

NASA Goddard Space Flight Center
Greenbelt, Maryland

Check the POES Master Controlled Documents list at: http://poes.gsfc.nasa.gov/iso/baseline.pdf to verify that this is the correct version before use.

Change Record Page

CCR Approved	CCR Number	Affectivity	MOD Number	MOD Issued
12/18/95	1378	4, 5, 7, 10, 14, 15, 16, 25, 30, 31, 32	25	
02/25/98	1535	14	43	
05/29/98	1554	40, 41	50	
09/14/99	1554A	40, 41	68	
12/23/98	8125	Table B-1	74	
12/29/99	1553	27, 28, 29	78	
05/05/99	8127A	B-1	92	03/05/02
08/12/99	8129	B-1	92	03/05/02
08/12/99	8130	B-1	92	03/05/02
10/21/99	8131	B-1	92	03/05/02
10/21/99	8132	B-1	92	03/05/02
05/21/00	8134	B-1	92	03/05/02
09/02/00	8136	B-1	92	03/05/02

NOTE: After revising the document, file this sheet in document preceding table of contents.

Check the POES Master Controlled Documents list at: http://poes.gsfc.nasa.gov/iso/baseline.pdf to verify that this is the correct version before use.

TABLE OF CONTENTS

Section Page

1.0 SCOPE.....1-1

2.0 APPLICABLE DOCUMENTS AND NOTES.....2-1

2.1 APPLICABLE DOCUMENTS.....2-1

2.1.1 Specifications 2-1
2.1.2 Standards 2-1
2.1.3 METSAT Other Documents 2-1
2.1.4 EOS PM Project Documentation 2-1

2.2 NOTES.....2-2

2.2.1 Contractor/Subcontractor 2-2
2.2.2 Technical Officer 2-2

3.0 PERFORMANCE REQUIREMENTS.....3-1

3.1 OPERATIONAL REQUIREMENTS.....3-1

3.1.1 Nominal Orbital Parameters 3-1
3.1.2 Operational Modes 3-1

3.2 CHANNEL ASSIGNMENTS/REQUIREMENTS.....3-1

3.2.1 Center Frequency 3-1
3.2.2 Channel Bandwidth 3-3
3.2.3 Out-of-Band Rejection 3-3
3.2.4 Stop-bands 3-3
3.2.5 Receiver Subsystem Implementation 3-3
3.2.6 Gain Stability 3-3
3.2.7 Center Frequency Stability 3-3

3.3 SAMPLE PERIOD AND INTEGRATION TIME.....3-7
3.4 TEMPERATURE SENSITIVITY -- NEΔT 3-7
3.5 CALIBRATION.....3-7

3.5.1 In-Flight Calibration 3-7
3.5.2 Calibration Accuracy and Repeatability 3-8

3.5.2.1 General 3-8
3.5.2.2 Analyses 3-8
3.5.2.3 Calibration Algorithm 3-8

3.6 SYSTEM DYNAMIC RANGE AND LINEARITY.....3-8
3.7 ANTENNA SYSTEM.....3-9

Check the POES Master Controlled Documents list at: http://poes.gsfc.nasa.gov/iso/baseline.pdf to verify that this is the correct version before use.

TABLE OF CONTENTS
(CONTINUED)

Section Page

3.7.1 Beamwidth 3-9
3.7.2 Polarization 3-9
3.7.3 Beam Scanning 3-9

3.7.3.1 Cross-Track Scan 3-9
3.7.3.2 Scan Motion and Pattern 3-9
3.7.3.3 Scan Synchronization 3-10
3.7.3.4 Beam Pointing Accuracy 3-10

3.7.4 Beam Efficiency 3-13

3.8 ANALOG TO DIGITAL ELECTRONICS.....3-13

3.8.1 General 3-13
3.8.2 Multiplexer 3-13
3.8.3 Analog-to-Digital Converter 3-13
3.8.4 Independence of Measurements of Each Channel 3-15

3.9 HARDWARE MODEL REQUIREMENTS.....3-15

3.9.1 Protoflight Model 3-15
3.9.2 Flight Model 3-15
3.9.3 Drill Template 3-15

3.10 MATH MODEL REQUIREMENTS.....3-15

3.10.1 Radiometric Math Model 3-15
3.10.2 Structural Math Models 3-16
3.10.3 Thermal Analytical Models 3-16

4.0 AMSU-A IMPLEMENTATION.....4-1

4.1 GENERAL.....4-1
4.2 LIFE.....4-1

4.2.1 Storage Life 4-1
4.2.2 Mission Life 4-1

4.3 SINGLE-POINT FAILURES.....4-1
4.4 ELECTRICAL REQUIREMENTS.....4-2

4.4.1 Grounding and Shielding 4-2
4.4.2 Connector Requirements 4-2
4.4.3 Power System 4-2
4.4.4 AMSU-A Clock and Command Requirements 4-2
4.4.5 Data System 4-2
4.4.6 Test Points 4-2

Check the POES Master Controlled Documents list at: http://poes.gsfc.nasa.gov/iso/baseline.pdf to verify that this is the correct version before use.

TABLE OF CONTENTS
(CONTINUED)

Section Page

4.5 MECHANICAL REQUIREMENTS.....4-3

4.5.1 Mechanical Outline and Weight Limits 4-3
4.5.2 Mounting of the AMSU-A 4-3
4.5.3 Scan Mechanisms 4-3

4.5.3.1 Torque Margin 4-3
4.5.3.2 Motor Stall Vulnerability 4-3
4.5.3.3 Motor Type 4-3
4.5.3.4 Shaft "Encoders" 4-3
4.5.3.5 Shaft Drive Systems 4-3
4.5.3.6 Caging/Deployment 4-4
4.5.3.7 Pyrotechnic Devices 4-4

4.5.4 Accessibility and Maintainability 4-4

4.5.4.1 Accessibility 4-4
4.5.4.2 Maintainability 4-4

4.5.5 Protection and Handling 4-4
4.5.6 Magnetic Materials/Sources 4-4
4.5.7 Finish and Marking 4-4

4.5.7.1 Finish 4-4
4.5.7.2 Marking 4-4

4.6 THERMAL REQUIREMENTS.....4-5

4.6.1 General 4-5
4.6.2 Spacecraft Thermal Interface 4-5

4.6.2.1 Active Thermal Control 4-5
4.6.2.2 Passive Thermal Control 4-5
4.6.2.3 Environmental Fluxes 4-5

4.6.3 Design Requirements 4-5

4.6.3.1 Nominal Operating Temperature 4-5
4.6.3.2 Nominal Relative Humidity Range 4-6
4.6.3.3 Survivable Temperature Range 4-6
4.6.3.4 Standby and Launch Phase Mode Heating 4-6
4.6.3.5 Thermal Monitoring 4-6
4.6.3.6 Thermal Interface Control Drawings .4-6

Check the POES Master Controlled Documents list at: http://poes.gsfc.nasa.gov/iso/baseline.pdf to verify that this is the correct version before use.

TABLE OF CONTENTS
(CONTINUED)

Section Page

4.7 ELECTROMAGNETIC INTERFERENCE.....4-7
4.8 SPACE RADIATION DOSE LEVEL.....4-7
4.9 AMSU-A/SPACECRAFT INTERFACE.....4-7

5.0 GROUND SUPPORT EQUIPMENT REQUIREMENTS.....5-1

5.1 GENERAL.....5-1
5.2 SPECIAL TEST EQUIPMENT.....5-1

5.2.1 General 5-1
5.2.2 Requirements 5-1

5.3 CALIBRATION TEST EQUIPMENT.....5-2

5.3.1 General 5-2
5.3.2 Blackbody Calibration Targets 5-3

5.3.2.1 General 5-3
5.3.2.2 Requirements 5-3

5.3.3 Blackbody Spacecraft Test Targets 5-4

5.3.3.1 General 5-4
5.3.3.2 Requirements 5-4

5.3.4 Target Temperature Control/Monitor Unit 5-5

5.3.4.1 General 5-5
5.3.4.2 Control Console 5-5
5.3.4.3 Cables 5-5

5.4 HANDLING FIXTURES.....5-5
5.5 TEST FIXTURES.....5-5
5.6 DRILL JIGS.....5-5
5.7 SHIPPING/STORAGE CONTAINERS.....5-6

6.0 PERFORMANCE ASSURANCE REQUIREMENTS.....6-1

6.1 GENERAL.....6-1

6.1.1 Test and Calibration Procedure 6-1
6.1.2 Documentation of Tests and Calibrations 6-1
6.1.3 Performance Checks 6-1
6.1.4 Retesting 6-2
6.1.5 Limits Programs 6-2

Check the POES Master Controlled Documents list at: http://poes.gsfc.nasa.gov/iso/baseline.pdf to verify that this is the correct version before use.

TABLE OF CONTENTS
(CONTINUED)

Section Page

6.2 SYSTEM PERFORMANCE TEST REQUIREMENTS.....6-2

6.2.1 General 6-2
6.2.2 Functional Test Philosophy 6-2
6.2.3 Band-Pass Characteristics 6-2
6.2.4 System Linearity 6-4
6.2.5 Temperature Sensitivity -- NEΔT 6-4
6.2.6 Antenna Pattern Measurements 6-4

6.2.6.1 Pattern Center Frequency 6-4
6.2.6.2 Dynamic Range and Amplitude Accuracy 6-4
6.2.6.3 Number of Planes 6-4
6.2.6.4 Measurement Polarization 6-5
6.2.6.5 Angular Range and Interval 6-5
6.2.6.6 Beam Positions Required 6-5
6.2.6.7 Tuneable Short Test. 6-5

6.2.7 Results of Tests 6-6
6.2.8 Miscellaneous Test Requirements 6-6

6.2.8.1 Life Testing 6-6
6.2.8.2 Spacecraft Integration Test 6-6

6.3 SYSTEM CALIBRATION REQUIREMENTS.....6-7

6.3.1 General 6-7
6.3.2 Results of Calibrations 6-7
6.3.3 System Calibration Test Requirements 6-7

6.3.3.1 General 6-7
6.3.3.2 Special Test Requirements 6-9

6.4 SYSTEM QUALIFICATION/ACCEPTANCE REQUIREMENTS.....6-10

7.0 SOFTWARE REQUIREMENTS.....7-1

7.1 GENERAL.....7-1
7.2 INSTRUMENT FLIGHT SOFTWARE/FIRMWARE.....7-1
7.3 IN-FLIGHT OPERATIONS SOFTWARE.....7-1
7.4 INSTRUMENT GROUND SOFTWARE.....7-1
7.5 COMMAND LIST AND DESCRIPTION.....7-2
7.6 SOFTWARE.....7-2

APPENDIX A - GLOSSARY OF TERMS/ACRONYMS.....A-1

APPENDIX B - DEVIATION/WAIVER TABLE.....B-1

Check the POES Master Controlled Documents list at: http://poes.gsfc.nasa.gov/iso/baseline.pdf to verify that this is the correct version before use.

ILLUSTRATIONS

Figure Page

1. AMSU-A Passband Schematic Diagram.....3-4
2. AMSU-A1 Receiver Subsystem Block Diagram.....3-5
3. AMSU-A2 Receiver Subsystem Block Diagram.....3-6
4. Scan Direction and Spacecraft Coordinates Directions....3-11
5. Scan Patterns of AMSU-A and Resolution Cell.....3-12
6. A/D Converter Dynamic Range.....3-14
7. Radiometer Testing - General Philosophy.....6-3

TABLES

Table Page

1. AMSU-A Channel Characteristics.....3-2
2A. Calibration Test Parameters
(Instrument/Interface Temperature Combinations).....6-8
2B. Calibration Test Parameters (Test Matrix).....6-8
3. Instrument Testing.....6-10

Check the POES Master Controlled Documents list at: http://poes.gsfc.nasa.gov/iso/baseline.pdf to verify that this is the correct version before use.

1.0 SCOPE

This document specifies the performance testing, and calibration requirements of the Advanced Microwave Sounding Unit-A (AMSU-A). The complete AMSU system includes two functionally independent units, AMSU-A and AMSU-B [or Microwave Humidity Sounder (MHS)], to be used for obtaining data that will be used to compute atmospheric temperature and water vapor profiles. AMSU-A is a 15 channel temperature profiling unit and AMSU-B (or MHS) is a five channel water vapor profiling unit. This specification covers AMSU-A only.

One of the functions of the AMSU-A is to provide data in support of the Atmospheric Infrared Sounder (AIRS). This specification covers AMSU-A only.

The AMSU-A shall be a line-scan instrument designed to measure scene radiance in 15 channels to permit the calculation of the vertical temperature profile from the Earth’s surface to about 3 millibars pressure height. The radiometer shall be a total power system having a nominal field-of-view (FOV) of 3.3° at the half power points.

The instrument beams shall scan the earth viewing sector a total of 96.66° (±48.33° from nadir) on beam centers. There shall be a total of 30 beam positions (30 resolution cells spaced 3.33° along the scan line). These shall be designated cell numbers 1 through 30 as the scan progresses counter clockwise as one looks in the direction of the spacecraft orbital velocity vector. There shall be 15 cells on either side of nadir. The beam center position of each cell is separated from the adjacent cell along the scan direction by 3.33° (there shall be a noncumulative step tolerance of ±0.04°).

Primary onboard calibration will be accomplished using an onboard blackbody target and cold space as energy reference sources.

Check the POES Master Controlled Documents list at: http://poes.gsfc.nasa.gov/iso/baseline.pdf to verify that this is the correct version before use.

2.0 APPLICABLE DOCUMENTS AND NOTES

2.1 APPLICABLE DOCUMENTS

The following documents shall apply. Revisions in effect on the issue date of this specification shall apply, except as otherwise noted. Unless otherwise specified for METSAT, order of precedence is UIIS, GIIS, S-480-80. Unless otherwise specified for EOS, order of precedence is UIID, GIRD, S-480-80.

2.1.1 Specifications

S-480-79	Performance Assurance Requirements for the Advanced Microwave Sounding Unit Federal Standard Clean Room and Work Station
209B	Requirements, Controlled Environment

2.1.2 Standards

MIL-STD-130F	Identification Marking for U.S. Government Property
MIL-STD-461	Measurement of Electromagnetic Interface Characteristics
MIL-STD-462	Requirements for Equipment Electromagnetic Interface Characteristics
DOD-D-1000	Military Specification Drawings, Engineering and Associated Lists, Using Level 2 Drawings

2.1.3 METSAT Other Documents

RCA IS-3267415	METSAT General Instrument Interface Specification (GIIS)
RCA IS-2617547, RCA IS-2624483	AMSU-A Unique Instrument Interface Specifications (UIIS)

2.1.4 EOS PM Project Documentation

422-11-12-01	EOS General Interface Requirements Document	
422-12-12-02	EOS Unique Instrument Interface Document (UIID) for the AMSU-A Instrument	
422-12-12-05	Instrument Description Document (IDD) for the AMSU-A	
420-03-01	EOS Project Calibration Management Plan	January 30, 1990

Check the POES Master Controlled Documents list at: http://poes.gsfc.nasa.gov/iso/baseline.pdf to verify that this is the correct version before use.

422-10-04	EOS Software Management Plan	
GMI 8010.2	Classification of GSFC Orbital Flight Projects and Determination of Commensurate Performance Assurance Requirements	April 11, 1990

2.2 NOTES

2.2.1 Contractor/Subcontractor

This specification is written as though it were applicable only to a single contractor by omitting the term subcontractor, and other subcontractors. The use of the term contractor then denotes primary contractor; subcontractor then denotes principal subcontractor.

Should it be necessary for the primary contractor, the principal subcontractor, and other subcontractors to generate specifications for flight equipment, the requirements and phraseology as applicable in this specification shall be applicable.

2.2.2 Technical Officer

The term technical officer (TO) used herein applies to the responsible manager of an organization to whom technical and resource information is communicated as well as who takes appropriate action on the information.

Check the POES Master Controlled Documents list at: http://poes.gsfc.nasa.gov/iso/baseline.pdf to verify that this is the correct version before use.

3.0 PERFORMANCE REQUIREMENTS

The AMSU-A shall be a 15-channel total power microwave radiometer system. Table 1 presents the essential channel characteristics. AMSU-A shall be divided into two physically separate modules having the following characteristics:

(1) All the 5 millimeter oxygen band channels (channels 3 through 14) and channel 15 must be contained within one module (designated as AMSU-A1)

(2) The second module shall contain channels 1 and 2 and shall be designated as AMSU-A2.

(3) Each module must operate and interface with the spacecraft independently.

3.1 OPERATIONAL REQUIREMENTS

3.1.1 Nominal Orbital Parameters

The EOS AMSU-A will be flown in a 1:30 PM ascending node, circular sun-synchronous, near-polar orbit at an altitude of approximately 705 km. The METSAT will fly AM or PM orbit at approximately 850 km.

3.1.2 Operational Modes

EOS only -- The following are required operational modes for the AMSU-A: (The AMSU-A contractor shall recommend the instrument configuration for these modes.)

(1) Activation Mode: Initial turn-on and warm-up of the instrument.

(2) Operational Mode: Normal operation of the instrument.

(3) Safe Mode: Engineering data is collected but science data is not.

(4) Survival Mode: Emergency off mode; this is for a spacecraft emergency and the intent is that all instruments will be reactivated upon spacecraft recovery. Initiation of this mode shall require a minimum of commands; ideally no instrument reconfiguration is necessary before operating power is cut off. Survival heaters connected to a separate bus shall be provided, as necessary, to protect the instrument in this mode.

3.2 CHANNEL ASSIGNMENTS/REQUIREMENTS

3.2.1 Center Frequency

Table 1 lists the center frequency channel assignments to be used in the AMSU-A.

Check the POES Master Controlled Documents list at: http://poes.gsfc.nasa.gov/iso/baseline.pdf to verify that this is the correct version before use.

Table 1. AMSU-A Channel Characteristics (Mod 25)

CH NO.	CENTER FREQUENCY	NO. OF PASS BANDS	BANDWIDTH (MHz)	CENTER FREQUENCY STABILITY (MHz)	TEMPERATURE SENSITIVITY (K) NEΔT	CALIBRATION ACCURACY (K)	BEAM DIAMETER θ_B (degree)	POLARIZATION ANGLE θ_P
1	23800 MHz	1	270	10	0.3	2.0	3.3	V
2	31400 MHz	1	180	10	0.3	2.0	3.3	V
3	50300 MHz	1	180	10	0.4	1.5	3.3	V
4	52800 MHz	1	400	5	0.25	1.5	3.3	V
5	53596 MHz ±115 MHz	2	170	5	0.25	1.5	3.3	H
6	54400 MHz	1	400	5	0.25	1.5	3.3	H
7	54940 MHz	1	400	5	0.25	1.5	3.3	V
8	55500 MHz	1	330	10	0.25	1.5	3.3	H
9	57290.344 MHz = f_{LO}	1	330	0.5	0.25	1.5	3.3	H
10	f_{LO}±217 MHz	2	78	0.5	0.4	1.5	3.3	H
11	f_{LO}±322.2 ±48 MHz	4	36	1.2	0.4	1.5	3.3	H
12	f_{LO}±322.2 ±22 MHz	4	16	1.2	0.6	1.5	3.3	H
13	f_{LO}±322.2 ±10 MHz	4	8	0.5	0.80	1.5	3.3	H
14	f_{LO}±322.2 ±4.5 MHz	4	3	0.5	1.20	1.5	3.3	H
15	89.0 GHz	1	6000	130	0.5	2.0	3.3	V

Check the POES Master Controlled Documents list at: http://poes.gsfc.nasa.gov/iso/baseline.pdf to verify that this is the correct version before use.

3.2.2 Channel Bandwidth

Channel bandwidths, defined as the half-power point bandwidth, are listed in Table 1 and are the maximum acceptable bandwidth per pass-band. Figure 1 is a schematic of the pass-band bandwidths. All channels, regardless of the number of pass-bands, shall have only one output per channel. Each pass-band, within any one channel, shall have equal system gain within ±1 dB.

3.2.3 Out-of-Band Rejection (Mod 25)

The channel selection filter (IF) characteristics shall be such that at frequencies 0.65 times the specified half-power bandwidths away from the band center the filter gain shall be a minimum of 40 dB below the band-center value. Additionally for channels 11, 12, 13, and 14 an out of band rejection of 35 dB is allowable over a total bandwidth not to exceed 10% of the total bandpass width.

3.2.4 Stop-bands

For channels 1 through 4, channels 6 through 9, a stop-band with a maximum bandwidth of 20 MHz, centered at the band center, may be used to remove local oscillator noise. For channel 15, a stop-band with a maximum bandwidth of 1 GHz, centered at the band center, may be utilized to remove local oscillator noise. Stop-bands may also be used to remove any Radio Frequency Interference (RFI) as required.

3.2.5 Receiver Subsystem Implementation

A block diagram of the receiver subsystem for implementation for AMSU-A1 is provided in Figure 2. A similar implementation for AMSU-A2 is provided in Figure 3. Note that SAW filters are to be employed for channels 11 through 14.

3.2.6 Gain Stability

The band center gain of each passband shall vary no more than ±2 dB over the operating temperature range and life of the instrument.

3.2.7 Center Frequency Stability

The center frequency stability values listed in Table 1 are the maximum deviation from the channel center frequency for both long-term and short-term periods. Long-term means that the stability must be maintained over the operational life of the instrument.

Check the POES Master Controlled Documents list at: http://poes.gsfc.nasa.gov/iso/baseline.pdf to verify that this is the correct version before use.

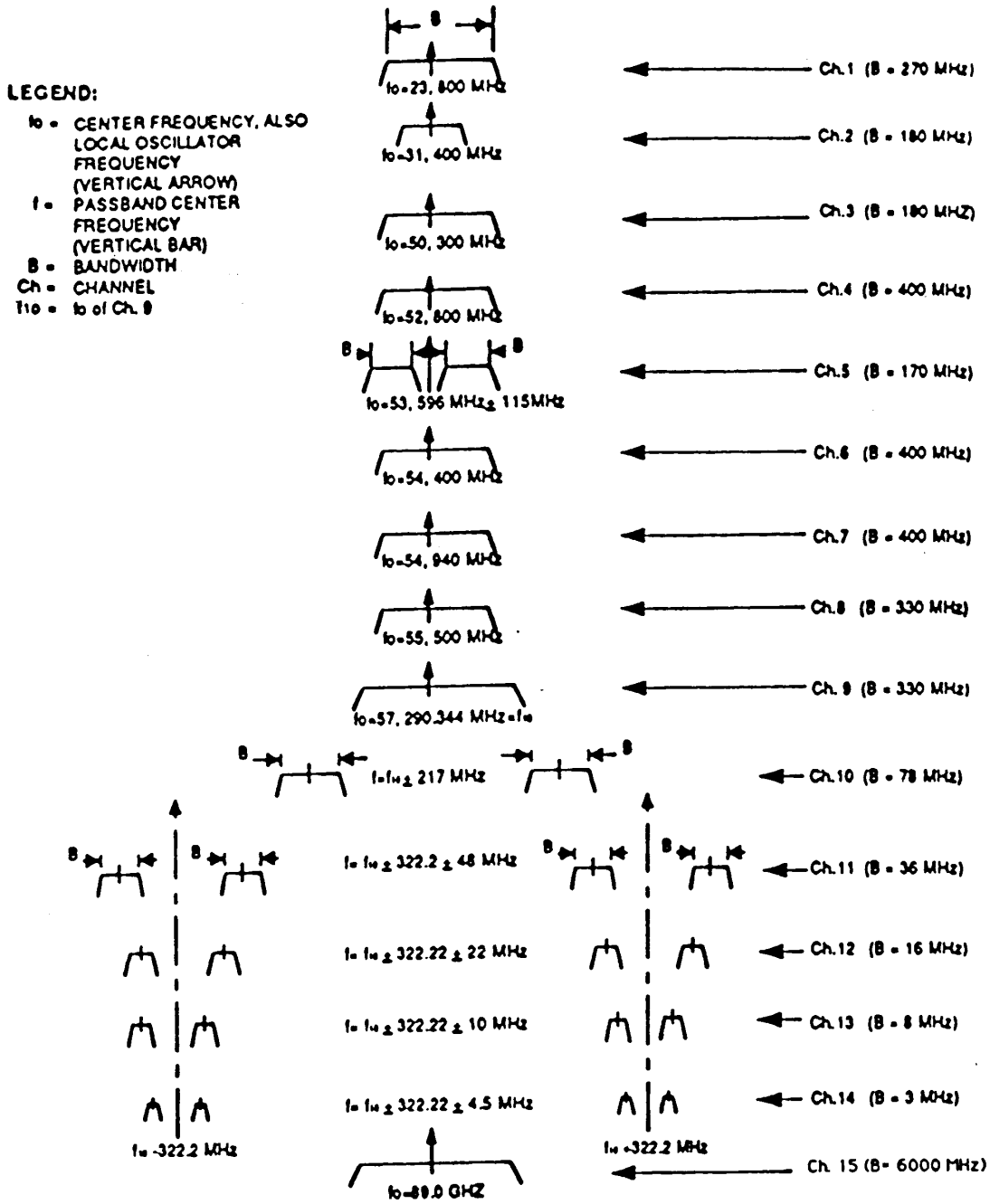

Figure 1. AMSU-A Passband Schematic Diagram

Check the POES Master Controlled Documents list at: http://poes.gsfc.nasa.gov/iso/baseline.pdf to verify that this is the correct version before use.

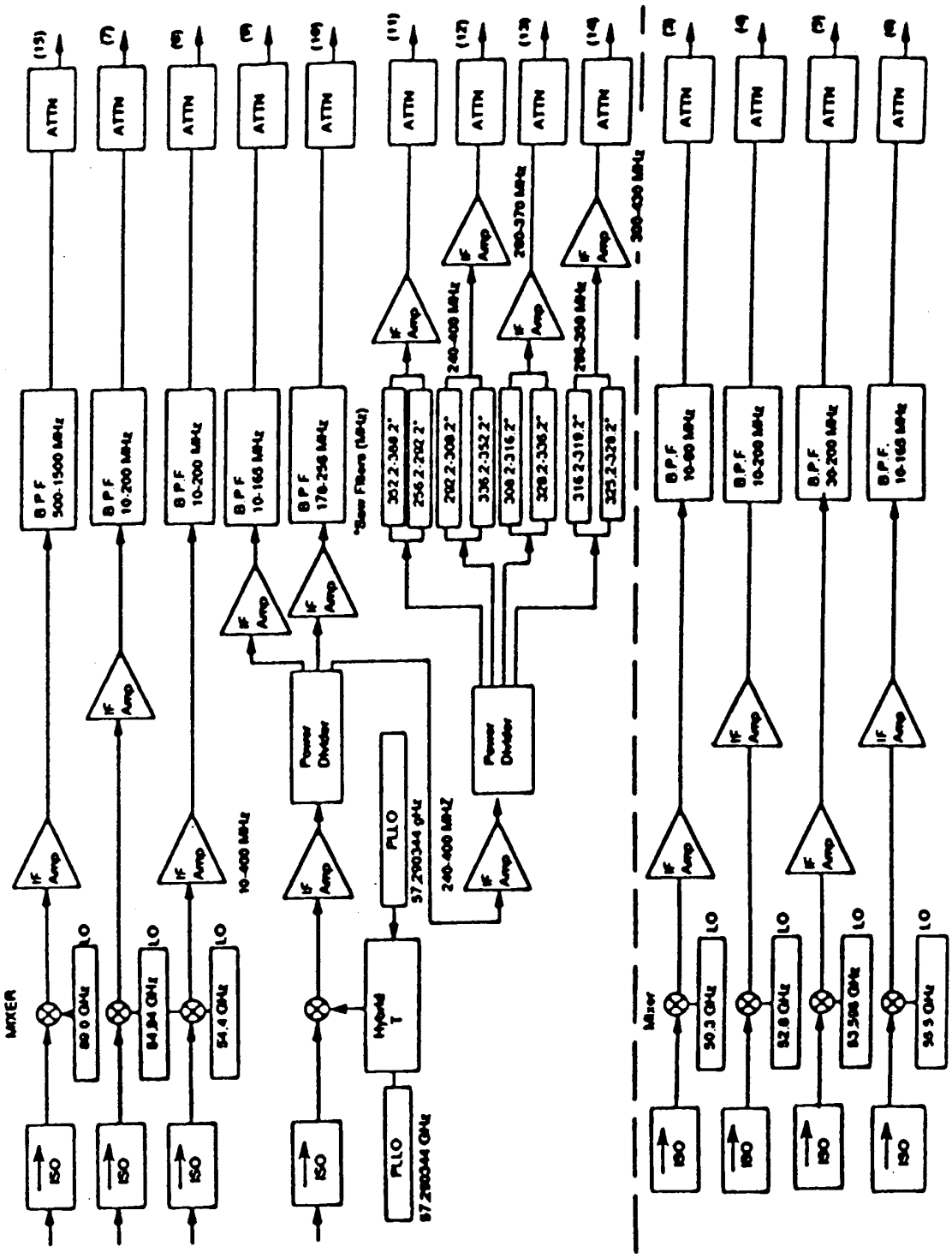

Figure 2. AMSU-A1 Receiver Subsystem Block Diagram

Check the POES Master Controlled Documents list at: http://poes.gsfc.nasa.gov/iso/baseline.pdf to verify that this is the correct version before use.

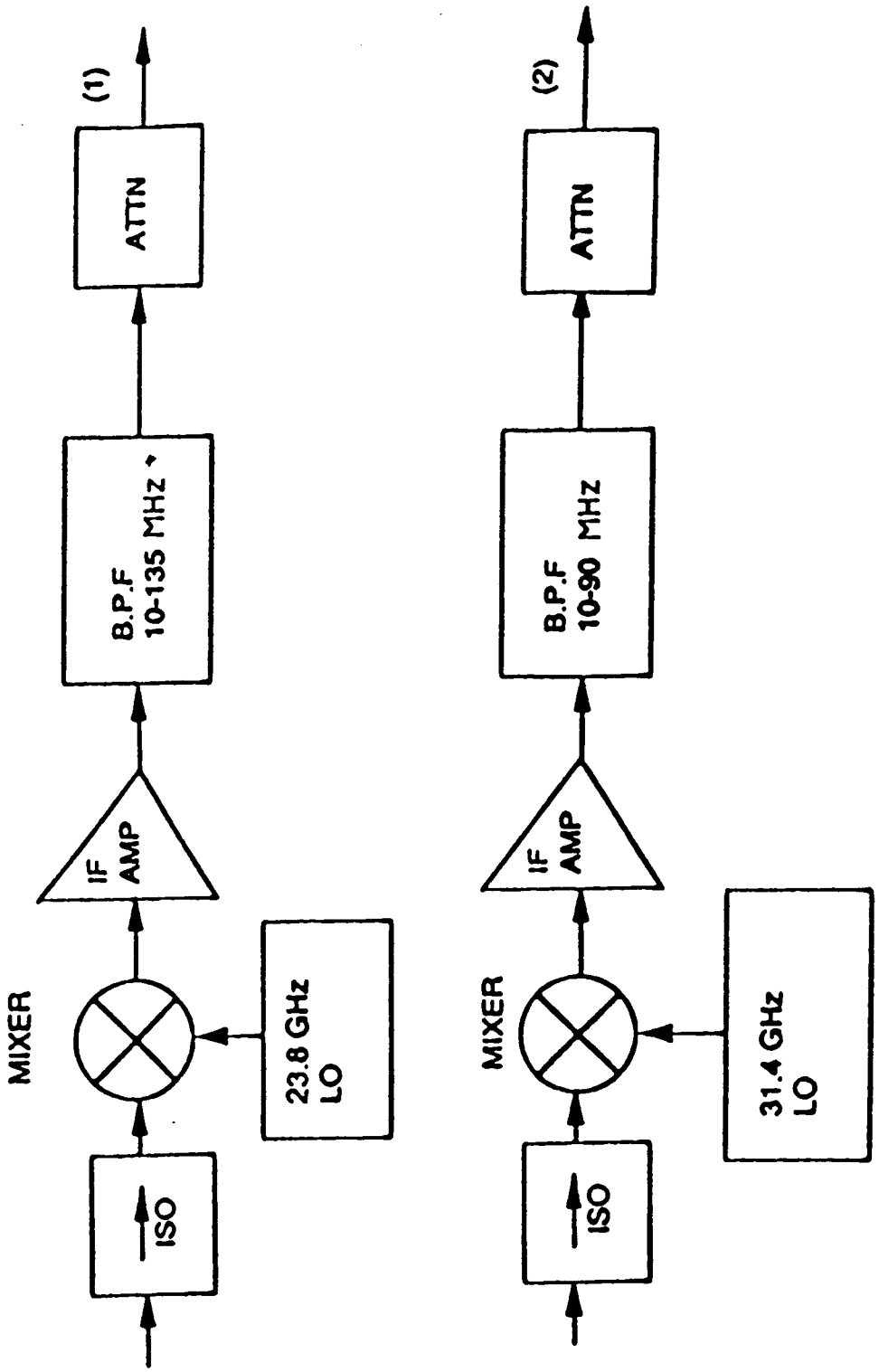

Figure 3. AMSU-A2 Receiver Subsystem Block Diagram

Check the POES Master Controlled Documents list at: http://poes.gsfc.nasa.gov/iso/baseline.pdf to verify that this is the correct version before use.

3.3 SAMPLE PERIOD AND INTEGRATION TIME

The sample period is defined as the integration time per resolution cell (hereafter called integration time) plus the time necessary to clear the integrator to assure independent samples of sequential integration periods. The sample period shall be identical for all beam positions. The sample period shall be chosen by the contractor to be consistent with the requirements set forth in this specification. Principally, the total scan period for 30 Earth view resolution cells (one sample period each) and two calibration target resolution cells (one hot and one cold with a minimum of two sample periods each) shall be 8 seconds. For each resolution cell, the sample period of all channels shall be coincident.

3.4 TEMPERATURE SENSITIVITY -- NEΔT

Temperature sensitivity (NEΔT) of a radiometer is defined as the minimum detectable change of the brightness temperature incident at the antenna collecting aperture. For the purpose of this specification, the NEΔT values listed in Table 1 shall be defined as the standard deviation of the radiometer output in degrees Kelvin (K) when the antenna is viewing a 300° K uniform target.

3.5 CALIBRATION

3.5.1 <u>In-Flight Calibration</u> (Mod 25)

There shall be two in-flight calibration measurements during each scan period, a "hot" calibration and a "cold" calibration.

Each calibration measurement shall comprise a minimum of two sample periods. All channels shall utilize a "through-the-antenna" calibration method whereby the calibration targets are viewed by the antenna main reflector.

The "cold" calibration target shall be the cosmic background radiation (cold space). At the cold calibration position, the antenna system shall have a clear unobstructed view of cold space. The "hot" calibration target shall be an instrument ambient target (nominally 300 K).

The heat flow through the hot target shall be minimized. A minimum of 4 independent platinum wire type temperature sensors shall be distributed through the target for AMSU-A1 (by design 5, minimum 4 fully functional), a minimum of 7 for AMSU-A2, so as to assure knowledge of the thermal temperature to ±0.10 K. The brightness temperature of the target, at the relevant microwave frequencies of the AMSU-A, shall be known to an accuracy of ±0.2 K. This accuracy shall include the error in the knowledge of the thermal temperature of the target, residual temperature gradients across the target, and the uncertainty in the microwave emissivity. [The targets shall achieve a calculated effective emissivity of 0.9990 or greater.]

Check the POES Master Controlled Documents list at: http://poes.gsfc.nasa.gov/iso/baseline.pdf to verify that this is the correct version before use.

3.5.2 Calibration Accuracy and Repeatability

3.5.2.1 General -- Calibration accuracy and repeatability are defined as the difference (error) between the brightness temperature inferred from the microwave radiometer (referred to the antenna collecting aperture) and the actual brightness temperature of a blackbody test target directly in front of the antenna. Calibration accuracy is the average long-term error with a time scale longer than 24 hours. Calibration repeatability is the short-term error (drift, etc.) of 16-second continuous calibration averages. The sensitivity (NEΔT) specifications apply to single integration time intervals referenced to 60-second averages. The calibration accuracies are listed in Table 1. Calibration repeatability for all channels shall be less than 0.3 K.

3.5.2.2. Analyses -- The contractor shall demonstrate through laboratory testing and analyses that the overall calibration accuracy, when the instrument is used in its orbital configuration, meets the requirements of Table 1. The overall accuracy includes errors contained in the laboratory tests and other effects including (1) transition from the laboratory simulated cold space target to the in-orbit cold space target, (2) emissions from the spacecraft and/or other instruments entering the near fields of the radiometer antennas, (3) time dependent degradation of the reference targets, (4) the error in the knowledge of the thermal temperature of the target, residual temperature gradients across the target, and the uncertainty in the microwave emissivity, and (5) the accuracy of the test equipment. Likewise, the calibration repeatability shall be demonstrated to be within the channel NEΔT for a time period no less than 200 seconds.

3.5.2.3 Calibration Algorithm -- From the calibration results, the contractor shall provide the in-orbit antenna temperature calibration algorithm for each channel of the protoflight and each flight model. This algorithm will be included in the Calibration Log for each model (see section 6.3).

3.6 SYSTEM DYNAMIC RANGE AND LINEARITY

The dynamic range of the radiometer system shall be from 3 to 330 K. Within the dynamic range, the radiometer output shall be essentially linear with respect to the input brightness temperature at the antenna aperture. The residual nonlinearity, defined as the departure from the expected value of an ideal linear radiometer, at all points within the dynamic range, shall be smaller than 0.25 times the calibration accuracy values listed in Table 1 and shall not vary by more than the NEΔT value over the instrument nominal operation temperature range.

Check the POES Master Controlled Documents list at: http://poes.gsfc.nasa.gov/iso/baseline.pdf to verify that this is the correct version before use.

3.7 ANTENNA SYSTEM

3.7.1 Beamwidth

The antenna beamwidth of all AMSU-A channels shall be 3.3°. The beamwidth is defined as the half-power points beamwidth (HPBW). The beamwidth in any plane containing the main beam axis (electrical boresight axis) shall be within plus or minus ±10% of the 3.3° value. Beamwidth variation from channel to channel shall be smaller than 10% of the specified beamwidth value.

3.7.2 Polarization

The polarization requirement (qp) is specified in Table 1. Notice that the polarization angle changes as a function of the scan angle. The polarization angle is defined as the magnitude of the angle between the electric field vector of the incoming radiation and a line which is the intersection of a plane perpendicular to the propagation direction of the incoming radiation and a plane tangent to the earth surface. Scan angle is defined as the angle between nadir and the antenna electrical boresight direction.

With respect to Table 1, vertical polarization is defined as having the polarized vector in the sun-nadir plane when the beam is pointing at nadir. Horizontal polarization is defined as having the polarization vector in the velocity-nadir plane when the beam is pointing at nadir.

3.7.3 Beam Scanning

Each channel of the AMSU-A is considered to form a beam. All main beam axes of the AMSU-A shall be coincidental, i.e., they shall be pointing in the same direction at the same time for any given beam position. (See section 3.7.3.4 for pointing accuracies required.) In the following sections, if only one beam is discussed it is inferred to represent any and all beams.

3.7.3.1 Cross-Track Scan -- The AMSU-A beams shall have cross-track scanning. All beams shall scan in a plane perpendicular to the spacecraft orbital velocity vector. The sense of the scan shall be counter clockwise as one looks along the spacecraft orbital velocity direction, namely, the antenna scans from the sun direction through nadir to the cold space direction and repeats as illustrated in Figure 4.

3.7.3.2 Scan Motion and Pattern -- The AMSU-A antenna scan motion shall be a "step" scan type.

In the step scan, the antenna "steps" (moves from one beam position to the adjacent beam position) and stops at each beam position for a period equal to the sample period, plus a "settle" time, sufficient to insure a maximum jitter (percentage overshoot/undershoot of the antenna step) as follows A1: a jitter up to +10% is allowed for any 10 ms period in the first .33 of the step period. Otherwise, the jitter shall be less or equal ±5%.

Check the POES Master Controlled Documents list at: http://poes.gsfc.nasa.gov/iso/baseline.pdf to verify that this is the correct version before use.

A2: a jitter up to +10% is allowed for any 20 ms period in the first .33 of the step period. Otherwise, the jitter shall be less or equal ±5%. The step time for the 30 Earth view beam positions shall be equal.

The AMSU-A beams shall scan the earth viewing sector a total of 96.66° (±48.33° from nadir) on beam centers. There shall be a total of 30 beam positions (30 resolution cells on the earth surface), to be called cell numbers 1 through 30, from sun to antisun. There shall be 15 cells on either side of nadir (see Figure 4). The beam center position of each cell is separated from the adjacent cell along the scan direction by 3.33° (there shall be a noncumulative step tolerance of ±0.04°).

There shall be 4 beam positions selectable by command, to provide a cold (space look) calibration position. The primary cold calibration beam position shall nominally be at 6.66° from the sun X velocity plane in the nadir direction. The three "alternate" cold calibration positions shall nominally be at 8.33°, 10.00° and 13.33° declinations.

The total scan period for 30 earth view resolution cells (one sample period each) and two calibration target resolution cells (one hot and one cold with two sample periods each) shall be 8 seconds.

3.7.3.3 Scan Synchronization (Mod 25)

METSAT only -- The Spacecraft AMSU Information Processor (AIP) will provide the AMSU-A with a frame synchronization pulse (FSP) once every 8 seconds. Upon receipt of the FSP, the antenna(s) of the AMSU-A shall be at cell #1 (as shown in Figure 5) ready to begin a sample period, and the AMSU-A shall begin its scan sequence which samples the 30 earth fields-of-view, cold space, the hot calibration target, and returns to FOV cell #1, and be ready to begin the next scan exactly eight seconds later. At the receipt of the next FSP, the sequence repeats. Within the earth fields-of-view sector of the scan, all antennas shall be commanded to step simultaneously (maximum 1 ms differential, noncumulative).

EOS only -- The AMSU-A shall receive time information from the spacecraft command and telemetry bus as specified in section 6.5.7 of the GIRD.

3.7.3.4 Beam Pointing Accuracy (Mod 43)-- At each beam position, in both the scan (crosstrack) and the spacecraft velocity (downtrack) directions, the beam pointing accuracy, defined as the difference between the intended and actual beam electrical boresight directions, when normalized to the mean of the window channel electrical boresight directions (channels 3, 4, and 15 for module A1; channels 1, 2 for module A2), shall be better than ±0.2° with a knowledge of ±0.1°. The window channel mean, for each module, shall be within ±0.2° of the scan plane.

Check the POES Master Controlled Documents list at: http://poes.gsfc.nasa.gov/iso/baseline.pdf to verify that this is the correct version before use.

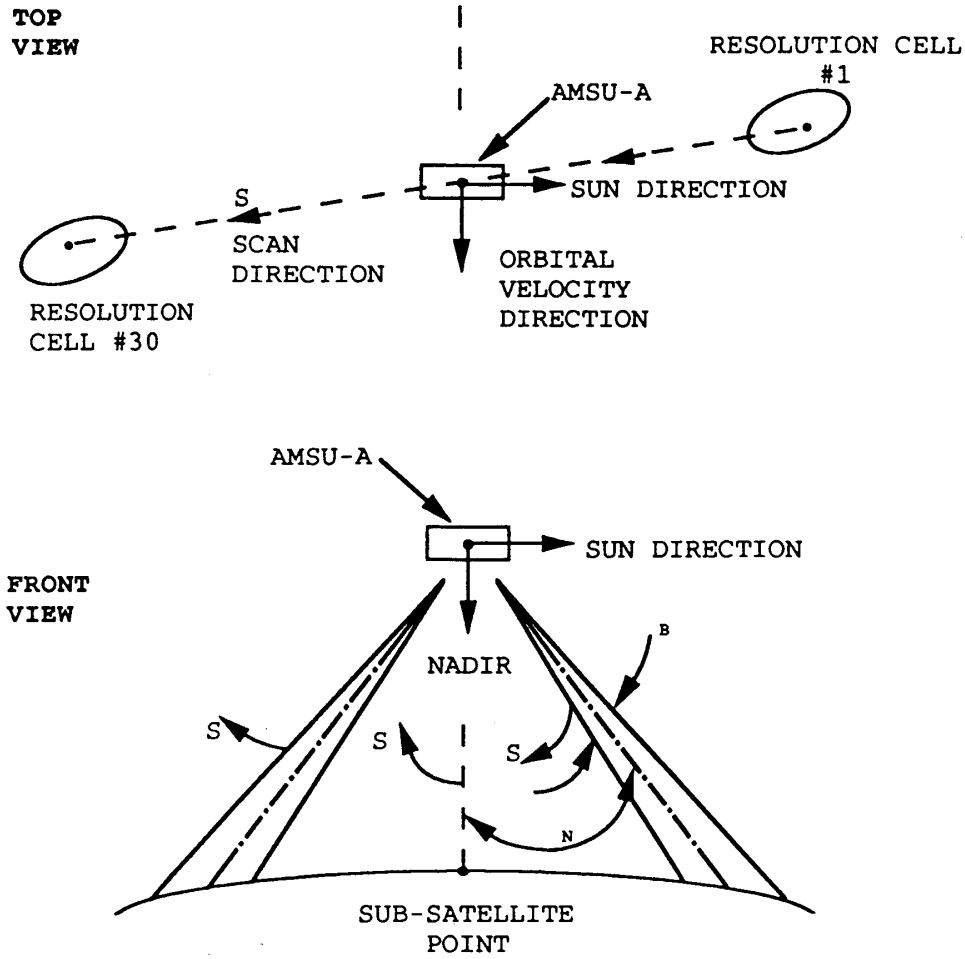

B: BEAM WIDTH
S: SCAN DIRECTION
N: SCAN ANGLE
(BEAM CENTER, FROM NADIR)

SPACECRAFT COORDINATE MATRIX

	EOS	METSAT
VELOCITY	+X	-Y
NADIR	+Z	+X
SUN	-Y	+Z

Figure 4. Scan Direction and Spacecraft Coordinates Directions

Check the POES Master Controlled Documents list at: http://poes.gsfc.nasa.gov/iso/baseline.pdf to verify that this is the correct version before use.

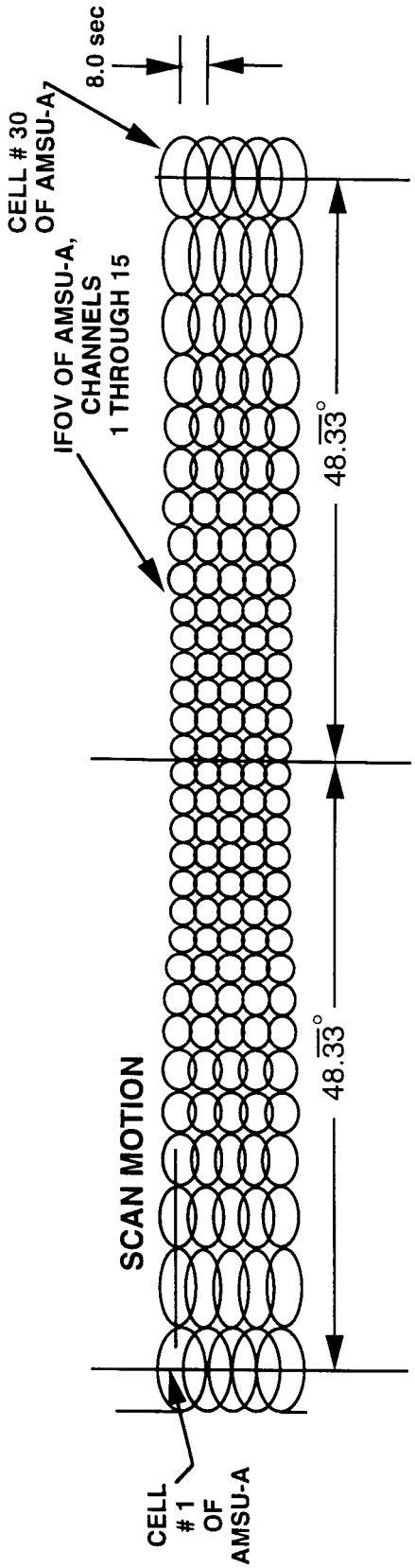

Figure 5. Scan Patterns of AMSU-A and Resolution Cell (Mod 25)

Check the POES Master Controlled Documents list at: http://poes.gsfc.nasa.gov/iso/baseline.pdf to verify that this is the correct version before use.

The beam scan angle of every beam position, 30 earth viewing and two calibration viewing positions, shall be digitized (12 bit minimum accuracy) and multiplexed with the corresponding radiometric value. The digitizer used shall be designed to give position readout anywhere within the 360° rotation.

The alignment of the AMSU-A beam electrical boresight axes shall be measured with respect to an optical alignment cube. (The optical alignment cube shall be visible on the nadir side and a lateral velocity or anti-velocity direction for verifying alignment on the spacecraft. The optical cube(s) shall be permanently attached to the instrument and shall not interfere with the instrument operation.) The beam electrical axis, with respect to the instrument optical alignment cube and the instrument mounting surfaces, shall not be changed by more than ±0.05° as a result of any testing.

3.7.4 Beam Efficiency

The antenna beam efficiency shall be 95% or better. This requirement shall be met at all frequencies and all beam positions. For the purpose of this specification, beam efficiency is defined as the ratio of the energy received within the diameter of the "main lobe" to that of the total energy received by the antenna. The "main lobe" is defined as equal to 2.5 times the HPBW. In determining the beam efficiency, the antenna is assumed to be in a radiometrically isotropic environment, i.e., the brightness temperature is the same from every direction.

3.8 ANALOG TO DIGITAL ELECTRONICS

3.8.1 General (Mod 25)

The analog to digital electronics shall consist of a multiplexer and 15 bit A/D converter. The allocation of the 15 bits vs. antenna brightness temperature approximate values are shown in Figure 6.

3.8.2 Multiplexer

The multiplexer shall not introduce a voltage offset or other errors sufficient to degrade the overall A/D conversion accuracy beyond 0.1% of full scale.

3.8.3 Analog-to-Digital Converter

The accuracy of the A/D converter at 15° C shall be plus or minus 1 LSB maximum allowable error. In addition, the differential nonlinearity (the bit-to-bit variation) shall not exceed plus or minus 1 bit. Over the instrument mounting foot/baseplate temperature range of 0° C to 30° C the maximum allowable error shall not exceed ±1 LSB.

Check the POES Master Controlled Documents list at: http://poes.gsfc.nasa.gov/iso/baseline.pdf to verify that this is the correct version before use.

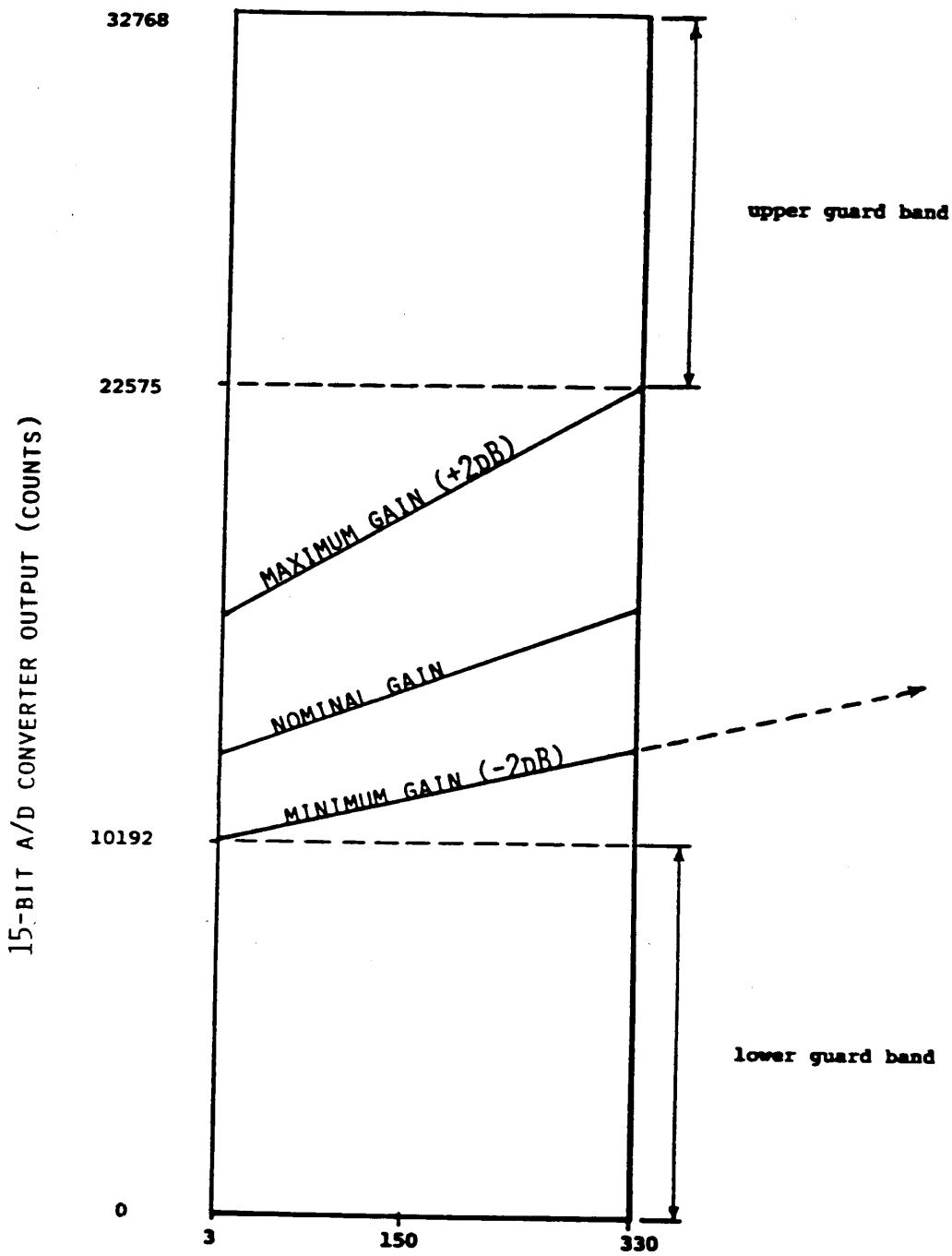

Figure 6. A/D Converter Dynamic Range

Check the POES Master Controlled Documents list at: http://poes.gsfc.nasa.gov/iso/baseline.pdf to verify that this is the correct version before use.

3.8.4 Independence of Measurements of Each Channel

The output signal presented to the A/D for each channel sample period shall be independent of past signals in that channel and signals in other channels. The output of each channel sample period shall not be in error by more than 0.01% (of full scale) because of any previous signals in that channel or crosstalk from other channels.

3.9 HARDWARE MODEL REQUIREMENTS

3.9.1 Protoflight Model

The Protoflight Model (PFM) is the first model which undergoes the entire test and calibration program. It undergoes qualification test conditions and, after any necessary refurbishment, will be flown on the first EOS PM Spacecraft.

3.9.2 Flight Model

Flight Models (FM) are built and tested to satisfy all contractual requirements. It undergoes acceptance test conditions and is flown on an EOS or METSAT spacecraft.

3.9.3 Drill Template

EOS only -- Drill templates shall be supplied for use in aligning the instrument mounting holes on the spacecraft. The template shall conform to GIRD Section 3.4.5.

3.10 MATH MODEL REQUIREMENTS

3.10.1 Radiometric Math Model

EOS only -- A Radiometric Math Model is an analytical model used to:

(1) Evaluate the end-to-end radiometric performance of the AMSU-A instrument

(2) Conduct sensitivity analyses

(3) Determine absolute and relative calibration accuracies

(4) Identify major error contributors which can be eliminated during the design phase

(5) Identify impact of error budget trades

(6) Assess instrument performance in terms of Signal/Noise Ratio (SNR), NEΔT, stability in orbit, etc.

The model shall be related to actual test and calibration data; the model shall be updated and refined during the course of the AMSU-A development program until it simulates instrument performance accurately.

Check the POES Master Controlled Documents list at: http://poes.gsfc.nasa.gov/iso/baseline.pdf to verify that this is the correct version before use.

Also to be included in the model are on-board and pre-flight ground laboratory calibration algorithms and a data book that contains all pertinent measured data required by the calibration algorithms. The on-board calibration algorithms are used along with ground calibration data to demonstrate that the absolute and relative radiometric accuracies are being met. The on-board calibration algorithms are deliverables, in a form suitable for incorporation into the Earth Observing System Data and Information System (EOSDIS), which convert from digital counts to calibrated spectral radiance based upon all on-board calibration devices. The calibration data shall also be provided in a mutually agreed upon computer-compatible form.

The radiometric math model may be a coherent compilation of multiple models or software packages.

3.10.2 Structural Math Models

Structural Math Models in accordance with Section 11.1 of the GIRD are required as instrument deliverables. A Structural Math Model is a numerical model used to evaluate the structural performance of the instrument’s primary and secondary structure. The instrument model will be integrated with the other observatory models for coupled loads analysis. If the complete instrument model contains more than 500 dynamic degrees of freedom, then a reduced version of the model shall be provided. These models shall be verified, and refined as required, after comparison with vibration test data, to meet the correlation levels that are specified in the GIRD.

3.10.3 Thermal Analytical Models

EOS only -- Surface Analytical Models and Thermal Analytical Models, in accordance Section 11.2 of the GIRD are required as instrument deliverables. These analytical models are used to evaluate the thermal performance of the instrument. The surface model shall be composed of less than 50 nodes; the thermal model shall be composed of less than 100 nodes. The Thermal Analytical Model shall have sufficient detail of all subsystems and critical interfaces to accurately predict absolute temperature, temperature gradients, and heat flow between nodes and interfaces. These models shall be verified and refined after comparison with thermal test data.

METSAT only -- The Thermal Model will be in accordance with EOS GIRD Section 11.2.

Check the POES Master Controlled Documents list at: http://poes.gsfc.nasa.gov/iso/baseline.pdf to verify that this is the correct version before use.

4.0 AMSU-A IMPLEMENTATION

4.1 GENERAL

METSAT only -- The AMSU-A shall consist of two physically separate modules, to be called AMSU-A1 and AMSU-A2, mounted externally on the Equipment Support Module (ESM) of an Advanced METSAT-N (ATN) spacecraft. Interface between the AMSU-A and the spacecraft shall be as defined in the GIIS and the UIIS and the subsections of this section.

A module shall consist of the antenna system(s), associated microwave and electrical circuits, including the radiometers' ADCs, power supplies, and spacecraft interface circuits for that module. Each module shall operate independently of the other module.

EOS only -- The scientific data from each module shall be interfaced with EOS PM spacecraft C&DH System.

4.2 LIFE

The AMSU-A will be continuously operated during its mission life.

4.2.1 Storage Life

The AMSU-A shall be designed to meet the requirements of this specification after a total storage period of up to 5 years either in a unique storage container or installed on the spacecraft. Age sensitive parts, materials, and components shall be identified. Storage containers shall also be the shipping containers. Methods and requirements for storage shall be supplied by the contractor.

4.2.2 Mission Life

The AMSU-A shall be designed for a 4-year operational life; 3 years (goal 5 years) continuous in-orbit plus 1 year spacecraft integration and test plus up to 5 years storage. The calculated probability of the AMSU-A functioning totally after three years in-orbit shall be 70% minimum for module A1 (assumes inclusion of a redundant local oscillator for channels 9-14) and 84% for module A2.

4.3 SINGLE-POINT FAILURES

Best available design techniques for minimizing single-point failures are required. Analyses of designs to substantiate trade-off conclusions of redundancy and backup operating modes versus power, weight, and cost are to be performed. See the "Performance Assurance Requirements for AMSU-A", S-480-79.

Check the POES Master Controlled Documents list at: http://poes.gsfc.nasa.gov/iso/baseline.pdf to verify that this is the correct version before use.

4.4 ELECTRICAL REQUIREMENTS

4.4.1 Grounding and Shielding

The grounding and shielding requirements for the AMSU-A circuits and the electrical interface between the AMSU-A and the METSAT/NOAA spacecraft are included in the GIIS and UIIS and for the EOS spacecraft in the GIRD section 5.3.

4.4.2 Connector Requirements

The connector requirements for the AMSU-A circuits and the electrical interface between the AMSU-A and spacecraft (for METSAT) are defined in the GIIS and UIISs. For the EOS spacecraft connectors are defined in GIRD section 5.4.5.

4.4.3 Power System

The AMSU-A subsystem power supply shall provide all power required to operate the instrument as specified in the METSAT GIIS, UIISs and in the EOS GIRD section 5.2.

4.4.4 AMSU-A Clock and Command Requirements

METSAT only -- AMSU-A input timing and control signals are defined in the GIIS and the UIIS. The AMSU-A shall operate synchronously with reference to the clock furnished from the spacecraft.

EOS only -- AMSU-A shall receive time information from the spacecraft command and Telemetry Bus as specified in section 6.9.7 of the GIRD.

4.4.5 Data System

EOS only -- The data system for the AMSU-A shall consist of circuitry needed to output all of the channels, temperature and voltage monitors, and general status information. All of this information shall be fed out to and controlled by the Spacecraft C&DH Subsystem. A complete description of the Spacecraft telemetry system can be found in Section 6, “Command and Data Handling Requirements” of the GIRD.

4.4.6 Test Points

General test points shall be provided in each AMSU-A module to permit selected signals within the AMSU-A to be monitored while the unit is under test on the bench or on the spacecraft to insure conformance with the specifications. The contractor shall determine the test points with the concurrence of the TO. The AMSU-A shall operate within specification while a test point is shorted. The requirements/characteristics of the test points are defined in the GIIS and the UIIS and in the GIRD section 5.6.

Check the POES Master Controlled Documents list at: http://poes.gsfc.nasa.gov/iso/baseline.pdf to verify that this is the correct version before use.

4.5 MECHANICAL REQUIREMENTS

4.5.1 Mechanical Outline and Weight Limits

The AMSU-A shall conform to the envelope dimensions, weight, moments of inertia/disturbance torque, and center of gravity location as defined in the UIIS for METSAT and in the UIID and ICD for EOS.

4.5.2 Mounting of the AMSU-A

METSAT only -- Mounting of the AMSU-A shall be in accordance with the locations, hole locations and sizes, mounting-plate/ bracketry size and finish, and all tolerances as defined in the UIISs for METSAT and ICD for EOS. The AMSU-A contractor is responsible for furnishing handling fixtures and drill fixtures as well as for the materials compatibility. Drill fixtures shall be used for drilling all mounting holes into the AMSU-A, spacecraft mounting, and simulated spacecraft mounting structure.

4.5.3 Scan Mechanisms

The scan mechanism shall comply with the requirements of the following:

4.5.3.1 Torque Margin -- The torque capability of the drive motor(s) and any other components in the scan mechanisms shall be sufficient to perform their proper function when the frictional torque is three times the worst predicted case. This includes worst-case combinations of environment (particularly temperature extremes), tolerances, lubricant contamination and/or evaporation, and other possible degradation at the end of the specified operational period.

4.5.3.2 Motor Stall Vulnerability -- The drive motor(s) shall not be damaged if powered with start-up currents under locked rotor conditions in an air or vacuum environment for 30 minutes. The drive motors shall not be damaged by any available shutdown mode or sequence.

4.5.3.3 Motor Type -- Motors shall not use brushes or contacting position sensors.

4.5.3.4 Shaft "Encoders" -- The shaft position digitizer shall be a noncontacting design. If the digitizer selected is an optical encoder, solid-state redundant light sources shall be utilized. Filament type lamps are not acceptable.

4.5.3.5 Shaft Drive Systems -- Scan drive systems shall be analyzed and tested to ensure that step and settle characteristics (linearity for continuous scan) meet the appropriate system error budget. Closed-loop scan systems shall have stiffness adequate to insure pointing performance in the presence of at least three times the expected maximum frictional torque and stability margins equivalent to 12 dB gain margin and 25 degree phase margin.

Check the POES Master Controlled Documents list at: http://poes.gsfc.nasa.gov/iso/baseline.pdf to verify that this is the correct version before use.

4.5.3.6 Caging/Deployment -- Caging of any subassemblies of the AMSU-A is not desired. However, if caging is necessary when the AMSU-A or spacecraft is transported, the spacecraft is launched, or during environmental testing, the caging device shall not require power to maintain the caged position. Uncaging shall not constitute a single-point failure. Caging shall be accomplished without AMSU-A disassembly. Deployable assemblies are not desired.

4.5.3.7 Pyrotechnic Devices -- Pyrotechnic devices shall not be used; only electromechanical devices are acceptable.

4.5.4 Accessibility and Maintainability

4.5.4.1 Accessibility -- The design of the AMSU-A shall permit easy module level accessibility to test points and components (i.e., local oscillators, mixers, etc.) that may require adjustment. Accessibility shall be considered through integration checkout of the spacecraft.

4.5.4.2 Maintainability -- Special tools for servicing or adjusting the AMSU-A, if required, shall be a part of the delivered instrument. Removable parts, such as subassemblies, wave-guide components, and connector savers, shall be keyed to insure proper reassembly and alignment.

4.5.5 Protection and Handling

The sensitive parts of each module, such as scanning antennas, reflectors, mirrors, polarization separators, etc., shall have protective covers when not in use. The protective covers shall not prevent the antenna from scanning. Each module of the AMSU-A shall be handled using a “primary handling fixture” provided by the AMSU-A contractor. Marked handling accommodations (handles, slings, handholds, etc.) will be used for transfer between the primary handling fixture and any test fixtures or the spacecraft integration fixture.

4.5.6 Magnetic Materials/Sources

Nonmagnetic materials shall be used in the construction of the AMSU-A, except for scan motors and PPL-20 (or subsequent) parts. Other magnetic materials require GSFC approval. The magnetic fields of magnetic sources in subassemblies shall be determined (magnitude and direction). See the GIIS and Section 10.16 of the GIRD for limits.

4.5.7 Finish and Marking

4.5.7.1 Finish -- The contractor shall insure that the external finishes applied to the AMSU-A will satisfy the mechanical, electrical, and thermal requirements of the spacecraft as defined in the GIIS and the GIRD.

4.5.7.2 Marking -- All assemblies shall be marked with the name of the assembly, assembly serial number, and connector

Check the POES Master Controlled Documents list at: http://poes.gsfc.nasa.gov/iso/baseline.pdf to verify that this is the correct version before use.

designations. The marking shall be in accordance with instructions in MIL-STD-130.

4.6 THERMAL REQUIREMENTS

4.6.1 General

The AMSU-A shall be designed to insure that the critical components (such as: orthomode transducer, mixer/local oscillator, IF amplifiers) shall stay within temperature limits that will insure satisfactory operation of the instrument.

4.6.2 Spacecraft Thermal Interface

The AMSU-A shall be thermally independent of the spacecraft interface to the fullest extent possible. The AMSU-A shall be in thermal contact with the S/C through the mounting feet only, and the design shall be such that there will be a maximum heat flow between each AMSU-A module and an S/C as defined in the UIIS and Section 4.3 of the GIRD.

4.6.2.1 Active Thermal Control -- The thermal design of the instrument shall utilize, to the fullest extent, heat transfer to space for thermal control.

Heater power may be required for operation in the activation mode, operational mode, safe mode, or survival mode. The heater power must be counted as part of the AMSU-A power budget and shall not exceed the UIID and UIIS allocation. The power necessary to maintain the instrument during safe mode operation shall be estimated.

4.6.2.2 Passive Thermal Control -- The conductive heat transfer through the AMSU-A mounting feet shall not be used as the primary heat flow path. The contractor shall be responsible for the design and shall supply all instrument thermal blanketing which may be required. Blanketing to interface with the spacecraft blankets will be supplied by the spacecraft contractor.

4.6.2.3 Environmental Fluxes -- Because the sun angle, defined as the angle between the satellite to sun line and the normal to the orbital plane, may vary from 0° to 80° for METSAT, 12° to 32° for EOS, the instrument may be exposed to solar radiation. The instrument must operate within specifications under all the above conditions.

During the launch and orbital acquisition phases, the instrument will be exposed to launch vehicle shroud heating, aerodynamic heating, and sun angles different from those expected during the orbital phase. In addition, there may be a period of time before turn-on when the instrument is fully eclipsed.

4.6.3 Design Requirements

4.6.3.1 Nominal Operating Temperature -- The nominal baseplate (mounting foot) temperatures seen by the AMSU-A are defined in the

Check the POES Master Controlled Documents list at: http://poes.gsfc.nasa.gov/iso/baseline.pdf to verify that this is the correct version before use.

GIIS and the UIIS for METSAT and for EOS +30°C to 0°C. The AMSU-A shall meet all performance requirements of this specification, i.e., be calibrated, over the entire range.

4.6.3.2 Nominal Relative Humidity Range -- The radiometer antenna reflector shall be designed to withstand exposure to a relative humidity of 95% at 30 degree C for 24 hours unless a waiver is requested of and granted by the TO. The instrument shall also be designed to withstand operation in an environment whose relative humidity may be as high as 60%.

4.6.3.3 Survivable Temperature Range -- The AMSU-A shall be built to survive periods in storage and in-orbit during which the instrument will be subject to temperature extremes of -20°C to +50°C. At these temperature extremes, the instrument shall survive without degradation or failure. However, at these extreme temperatures the instrument need not perform within the specification.

4.6.3.4 Standby and Launch Phase Mode Heating -- The contractor shall provide a heater system, operating from the spacecraft main power bus, to keep the instrument temperature as close to operational temperature as possible. The heater system can be used in all operating modes as required, provided its power dissipation is included in the instrument's total power budget.

4.6.3.5 Thermal Monitoring -- All critical components (orthomode transducer, mixer/local oscillator, IF amplifiers) shall have thermal sensors whose output shall be included in the instrument data stream. A separate and redundant thermal monitoring network shall be interfaced with the thermal control system (heater/louver). All thermal sensors shall have calibration traceable to the National Institute of Standards and Technology (NIST). These temperature monitors shall provide knowledge of the temperature to ±0.5 degrees Kelvin.

4.6.3.6 Thermal Interface Control Drawings (Mod 25) -- EOS and Metop only -- The AMSU-A contractor shall provide Thermal Interface Control Drawings as follows:

(1) Be scalable with reference dimensions and show orientations of surfaces relative to spacecraft axes.

(2) All external surface coatings and materials shall be labeled. Include a table of thermal properties and variations assumed for surfaces. Effective emittances or conductances through blankets shall be noted.

(3) A view of all faces of the instrument should be shown.

(4) Details of the mounting interface shall be shown, such as:

(a) Number and sizes of mounting feet or surfaces in contact with spacecraft
(b) Materials used as isolators and dimensions
(c) Conductances assumed

Check the POES Master Controlled Documents list at: http://poes.gsfc.nasa.gov/iso/baseline.pdf to verify that this is the correct version before use.

(5) Indicate significant structural material used.

(6) Indicate locations and amounts of power dissipated. A power summary or profile should be included which gives power variations for all modes of operations.

(7) Indicate all heater locations and dissipated powers for the heaters.

(8) Indicate all analog telemetry thermal sensors locations. Specify a control or reference thermal sensor for which temperature limits, as defined in the UIIS and IDD, are applicable.

(9) The drawing must illustrate how the instrument thermal blankets will interface with the spacecraft blanket and the AMSU-A harness blanket.

4.7 ELECTROMAGNETIC INTERFERENCE

The AMSU-A modules shall be designed to operate satisfactorily without mutual interference and normal electromagnetic interference (EMI) aboard the spacecraft onto which the AMSU-A will be integrated.

Standard techniques (MIL-STD-461 and MIL-STD-462 as modified in the GIIS and the UIIS) shall be used to insure that the AMSU-A is not susceptible to EMI or generates EMI that would cause degradation of other electronic equipments during prelaunch, launch, and post launch operations.

The modules of the AMSU-A shall not interfere with each other, particularly by a change in value of microwave brightness temperature, of greater than 0.25 K in the data channels outputs of the AMSU-A.

4.8 SPACE RADIATION DOSE LEVEL

The AMSU-A performance shall not be degraded when operating on the spacecraft in a space environment with particle radiation levels as defined in Section 10 of the GIRD.

4.9 AMSU-A/SPACECRAFT INTERFACE

The interfacing between the AMSU-A and a Spacecraft is governed by the GIRD, GIIS, UIISs that is prepared by NASA/GSFC and is revised only through NASA/GSFC change control board. The GIRD, UIID, GIIS UIISs variances, unique to the AMSU-A, are contained in an ICD. Detailed mechanical, electrical, and thermal interfaces of the AMSU-A will be maintained by the spacecraft contractor in coordination with the AMSU-A contractor and GSFC.

Check the POES Master Controlled Documents list at: http://poes.gsfc.nasa.gov/iso/baseline.pdf to verify that this is the correct version before use.

5.0 GROUND SUPPORT EQUIPMENT REQUIREMENTS

5.1 GENERAL

The AMSU-A Ground Support Equipment (GSE) shall comprise the unique equipment required to handle, test, check, and calibrate the AMSU-A as well as all equipment required for spacecraft integration, functional operation, and checkout during spacecraft system level testing.

5.2 SPECIAL TEST EQUIPMENT

5.2.1 General

The Special Test Equipment (STE) shall be used to operate the AMSU-A during performance verification and calibration testing at the AMSU-A contractor's facility. It shall also be used at the spacecraft contractor's facility for instrument functional testing. It shall provide power, clock, command and telemetry interfaces which are normally furnished by the spacecraft. The STE shall be capable of recording and analyzing the data received from the AMSU-A. The contractor shall demonstrate and document the accuracy of the STE.

5.2.2 Requirements (Mod 78)

(1) The automated data system shall be capable of "real time" data analysis during testing and shall provide print out of the results and a continuous magnetic recording of all processed data. The option shall be available to provide a continuous magnetic recording of all data as received from the instrument in place of/in addition to the processed data. The automated data system shall also be capable of reading a S/C Contractor "History Tape" and performing data analysis of the AMSU-A data contained on the tape.

(2) Upon selection, the STE shall provide a means of decommutating any word or channel data set in the AMSU-A output bit stream and displaying the total decimal count and its channel identification on a suitable display.

(3) The STE shall provide an interface with the AMSU-A calibration blackbodies such that the blackbody temperature circuit data will be automatically entered into the automated data system and correlated with the AMSU-A brightness temperature data.

(4) The STE shall provide tests for all significant AMSU-A and STE voltages and signals.

(5) The STE shall operate form a 115 volt, 60 Hz line.

(6) The STE shall include self-test features to insure proper operation.

Check the POES Master Controlled Documents list at: http://poes.gsfc.nasa.gov/iso/baseline.pdf to verify that this is the correct version before use.

(7) METSAT only -- The STE shall furnish all power, clock frequencies, AIP and TIP timing signals and correct slot enable signals, and commands needed by the AMSU-A and normally supplied by the spacecraft. The STE shall be designed to duplicate all interfaces normally supplied by the spacecraft.

(8) METSAT only -- The STE shall furnish clock frequencies (1.248 MHz per GIIS section 3.1.4.3) and data system timing signals (8 second frame sync) for use by the AMSU-B STE during compatibility testing.

(9) EOS only -- The STE shall furnish all power, clock frequencies, timing signals and correct slot enable signals, and commands needed by the AMSU-A and normally supplied by the spacecraft. The STE shall be designed to duplicate all interfaces normally supplied by the spacecraft. Also have a capability to receive AMSU-A data stream for A1 and A2 simultaneously from s/c GSE during s/c integration and testing. When STE is used with s/c GSE it should be capable of doing the same data analysis (A1 and A2 simultaneously) as during STE AMSU-A interface testing.

(10) The contractor shall purchase and design the STE automatic processing equipment. The equipment must, at a minimum, be capable of generating self-test programs, command sending and verification programs, checks, etc., and analyzing the data from the AMSU-A.

5.3 CALIBRATION TEST EQUIPMENT

5.3.1 General

The contractor shall supply calibration test equipment. Calibration equipment will be utilized at the contractor's facility to fully calibrate the AMSU-A prior to shipment to the spacecraft contractor's facility. One set of calibration equipment will be delivered with the protoflight model for use at the spacecraft contractor's facility during all spacecraft level tests.

The calibration equipment intended for use at the contractor's facility shall consist of one variable controlled "Earth" blackbody target, one fixed "Space" blackbody target, one controller for the targets, mounting hardware, and cabling.

The calibration equipment to be delivered to the spacecraft contractor's facility shall consist of one fixed temperature "Space" target identical in design to the calibration blackbody target for use at the contractor's facility, one controller for the targets, and cabling. (All equipment sent to the spacecraft contractor's facility shall meet additional requirements called out in the GIIS and UIIS for METSAT, GIRD and IDD for EOS.)

Check the POES Master Controlled Documents list at: http://poes.gsfc.nasa.gov/iso/baseline.pdf to verify that this is the correct version before use.

5.3.2 Blackbody Calibration Targets

5.3.2.1 General -- These blackbodies shall be used at the contractor's plant to provide the baseline calibration of the AMSU-A which will be used to demonstrate the flight worthiness of the instrument and to calibrate the instruments. Actual in-flight calibrations will be accomplished by the on-board targets and "cold" space. At the spacecraft contractor's facility, the second set of targets will be used in thermal/vacuum testing to check the instrument operation.

5.3.2.2 Requirements

(1) Location and Mounting - In operation, one target will fill the instrument's field-of-view in one earth facing beam position while the second target will fill the instrument's field-of-view from the "cold" space look position. The targets will be electrically and thermally isolated from the AMSU-A.

(2) Effective Emissivity - The emissive surfaces of the targets in a set shall be identical. The targets shall achieve a calculated effective emissivity of 0.9990 as a minimum value to be assured, with the value of 0.9995 as a design/measurement goal. Their actual emissivity shall be used in calculating the target effective blackbody temperature.

(3) Temperature Accuracy - The blackbody shall be designed and installed so that the temperatures measured with platinum thermometers, placed in selected areas of the radiating plate, will be representative of the effective blackbody temperature to within 0.05 K for calibration targets, and 0.1K for on-board targets.

(4) Gradients - The target shall be designed so that the effective surface temperature over the area viewed by the AMSU-A instrument shall be uniform to within 0.075 K at any temperature in the operating range. This requirement may be verified analytically.

(5) Operating Temperature Range - The effective blackbody radiating surface temperature for the "Earth" target shall be controllable over the range 84 K to 330 K in vacuum. The "Space" target shall operate at liquid nitrogen temperatures.

(6) Controlled Temperature Stability - The targets shall be able to be stabilized to 0.1 K.

(7) Amplitude of Controller Cycling - The controller cycling amplitude shall not exceed 0.09 K.

(8) Cooling (Mod 25) - The variable target and controller must be able to attain a controlled temperature of 84 K within four hours (goal) after start-up at 25° C in

Check the POES Master Controlled Documents list at: http://poes.gsfc.nasa.gov/iso/baseline.pdf to verify that this is the correct version before use.

vacuum. The fixed target shall attain a stable temperature within six hours (goal) after turn-on.

(9) Step Change (Mod 25) - The target and controller shall be designed so that the target stabilization at any temperature in the 84 K to 330 K range, the target temperature can be changed 25 K and restabilized within 3 hours (goal) to ±0.1 K. (A 50 K step shall restabilize within 3 hours (goal) to ±0.1 K.)

(10) Thermal Off-Loading - The design of the targets shall be such that the change of temperatures anywhere within the AMSU-A shall not exceed more than 3°C from the norm (spacecraft interface temperatures held constant).

(11) Temperature Sensor Requirements - The temperatures of the targets shall be measured with platinum resistance sensors whose calibration is traceable to the NIST. The sensors will be placed in the target radiating surface at positions which will represent the temperature seen by the instrument. The contractor shall design and supply circuitry to readout the platinum sensors. The sensors shall be powered and readout through the system test console. The sensor readout shall be designed to be sampled and formatted onto the magnetic tape along with the instrument data. The temperature readout circuitry shall be designed to achieve and accuracy of 0.05° C. The platinum wire sensor leads shall be electrically isolated from all other parts of the target.

5.3.3 Blackbody Spacecraft Test Targets

5.3.3.1 General -- These blackbody targets shall be used at the spacecraft contractor's facility during spacecraft thermal vacuum testing to verify the instrument operation.

5.3.3.2 Requirements

(1) Target Style -- The targets shall be identical in design to the "cold" space look position calibration blackbody target.

(2) Location and Mounting -- The target shall be designed such that the target will fill the instrument's field-of-view in one beam position. The spacecraft contractor shall design and fabricate the fixturing to mount the targets in the spacecraft checkout thermal/vacuum chamber. This fixture will position the targets within 1/4 inch of the instrument during testing. (During non test periods, the targets will be pulled away from the instrument.) The spacecraft contractor will also supply the solenoid and plumbing for controlling the liquid nitrogen flow rate.

Check the POES Master Controlled Documents list at: http://poes.gsfc.nasa.gov/iso/baseline.pdf to verify that this is the correct version before use.

5.3.4 Target Temperature Control/Monitor Unit (Mod 25)

5.3.4.1 General (Mod 25) -- The contractor shall provide control units for the blackbody targets. The control unit shall be designed to drive resistance type heaters operating against a liquid nitrogen heat sink. For spacecraft targets only monitoring capability is required.

5.3.4.2 Control Console -- The target console shall be capable of controlling the variable target independently and shall have independent digital temperature read-out equipment with a resolution of 0.05° C. The console shall have provision to read the target temperatures into the STE or the spacecraft contractor's data handling system. The console must have complete facilities for controlling the target temperatures as well as discrete outputs for monitoring each platinum resistance thermometer, the temperature set point, and the target status. The output to the spacecraft contractor's data handling system shall be provided as a buffered 0 to 10 volt signal as a function of target temperature. In addition, the console shall contain a test point and selector switch so that any output can be individually monitored.

5.3.4.3 Cables -- The contractor shall provide all cabling required for operation of the control consoles, including a set to be delivered to the spacecraft contractor's facility for interfacing the console and the spacecraft checkout targets. (The spacecraft contractor will provide extender cables to interface between the console and spacecraft checkout targets when the targets are installed in the spacecraft test chamber).

5.4 HANDLING FIXTURES

The contractor shall supply handling fixtures for the AMSU-A module(s) for use in moving the instrument between work/test stations. This handling fixture shall also be an integral part of the shipping/storage container for each model for use in removing and returning the AMSU-A to the container.

Handling/installation fixtures for use during spacecraft integration shall also be supplied. The requirement for these fixtures may be deleted if the primary handling fixture for the AMSU-A can function as the integration handling fixture.

5.5 TEST FIXTURES

The contractor shall provide all test fixtures necessary to verify the performance, calibrate, and qualify/acceptance test the AMSU-A as specified in Section 6.0 Performance Assurance Requirements.

5.6 DRILL JIGS

EOS only -- The contractor shall supply one drill template that meets the requirements of Section 3.4.5 of the GIRD.

Check the POES Master Controlled Documents list at: http://poes.gsfc.nasa.gov/iso/baseline.pdf to verify that this is the correct version before use.

5.7 SHIPPING/STORAGE CONTAINERS

The contractor shall provide a reusable water resistant and air tight shipping/storage container for each unit. The container shall incorporate means of purging with dry nitrogen. The container shall incorporate means of measuring and recording shocks and temperature within the container.

Check the POES Master Controlled Documents list at: http://poes.gsfc.nasa.gov/iso/baseline.pdf to verify that this is the correct version before use.

6.0 PERFORMANCE ASSURANCE REQUIREMENTS

6.1 GENERAL

The contractor shall establish an organized program for demonstrating that the AMSU-A design meets the functional requirements, that the hardware has been manufactured properly and will operate properly, and that software meets design and mission requirements. The contractor shall implement and maintain a performance assurance program as delineated in "Performance Assurance Requirements of the Advanced Microwave Sounding Unit-A (AMSU-A)," S-480-79.

6.1.1 Test and Calibration Procedure

As a minimum, the contractor shall prepare test and calibration procedures covering the requirements in Section 6.2, 6.3, and 6.4. Preliminary test and calibration procedures shall be submitted to the TO at least 30 days before testing or calibrating will commence. The tests will be sufficient as judged by the TO to obtain all information needed for full interpretation of the orbital data.

6.1.2 Documentation of Tests and Calibrations

The contractor shall organize the results of all tests into test reports which shall be submitted within 1 month after test completion. He will also organize and maintain a test and calibration data log book(s) which shall become a record of all tests which could aid in the interpretation of the orbital data, and all calibrations made for the instrument. The tests and calibrations will be summarized in a calibration algorithm (section 3.5.2.3) which will be included in the test and calibration data log book(s). The test and calibration log book(s) shall be delivered within 1 month after instrument delivery.

All recorded STE data for thermal vacuum and calibration testing shall be archived at the contractor's facility for a period of three (3) years post launch for each instrument. One copy of the recorded data shall be delivered on optical disc (1.3 GB) in PC compatible ASCII format. Data to be included on the tapes shall include all thermistor calibration values; all calibration curves for platinum temperature sensors; calibration curves for all voltage monitors; all telemetry, and housekeeping data recorded during the calibration test runs (instrument/ spacecraft interface temperatures) as specified in specification section 6.3.3.1, Table 2. Antenna pattern data for each instrument shall be included in the instrument calibration log book(s) and shall be delivered on PC compatible ASCII file floppy.

6.1.3 Performance Checks

The contractor shall perform a bench check of the instrument immediately before and after each of the qualification or acceptance tests specified (section 6.3).

Check the POES Master Controlled Documents list at: http://poes.gsfc.nasa.gov/iso/baseline.pdf to verify that this is the correct version before use.

6.1.4 Retesting

In the event of a failure during qualification or acceptance testing, the contractor may be required to rerun the complete test starting at the beginning of whichever test the failure occurred. The exact nature of the retest shall be determined jointly by GSFC and the contractor.

6.1.5 Limits Programs

The contractor shall develop a program to monitor all functions of the AMSU-A on a real-time basis. Certain functions shall be designated as critical and the program will be designed to shut down the instrument if these become out-of-limits. The program shall be designed to verify all operational modes and print out any tolerance items. The contractor shall use the program to thoroughly check the subsystem data outputs. It will be used to detect intermittencies and failures during extended periods of automatic system operation. It will continuously monitor all prime data, verify that they remain between preset limits, log all discrepancies detected using the printer, and will shut down the system in case of critical failures.

6.2 SYSTEM PERFORMANCE TEST REQUIREMENTS

6.2.1 General

Demonstrations of the performance characteristics (functional testing) of each model of AMSU-A are to be made to insure confidence that all subassemblies, assemblies, and modules meet the performance requirements of this specification. The general test plan and test specifications, as defined in the PAR, shall be generated by the contractor and approved by the TO.

6.2.2 Functional Test Philosophy

A minimum required functional test philosophy, but not a complete listing of functional tests that may be necessary, is illustrated in Figure 7. Note that the order or grouping is not a specific requirement. After careful planning by the contractor, a different order or grouping would likely result and would be included in the test plan and specifications. Specific requirements for certain delineated tests are included in following sections.

6.2.3 Band-Pass Characteristics

The band-pass characteristics must be measured and fully documented for each channel of each instrument. At each frequency band, the band-pass characteristics (gain versus frequency) shall be measured in both a swept response test and at a minimum of twenty discrete frequencies; 10 of these points within the pass-band, and the remaining points outside the pass-band (5 above and 5 below).

Check the POES Master Controlled Documents list at: http://poes.gsfc.nasa.gov/iso/baseline.pdf to verify that this is the correct version before use.

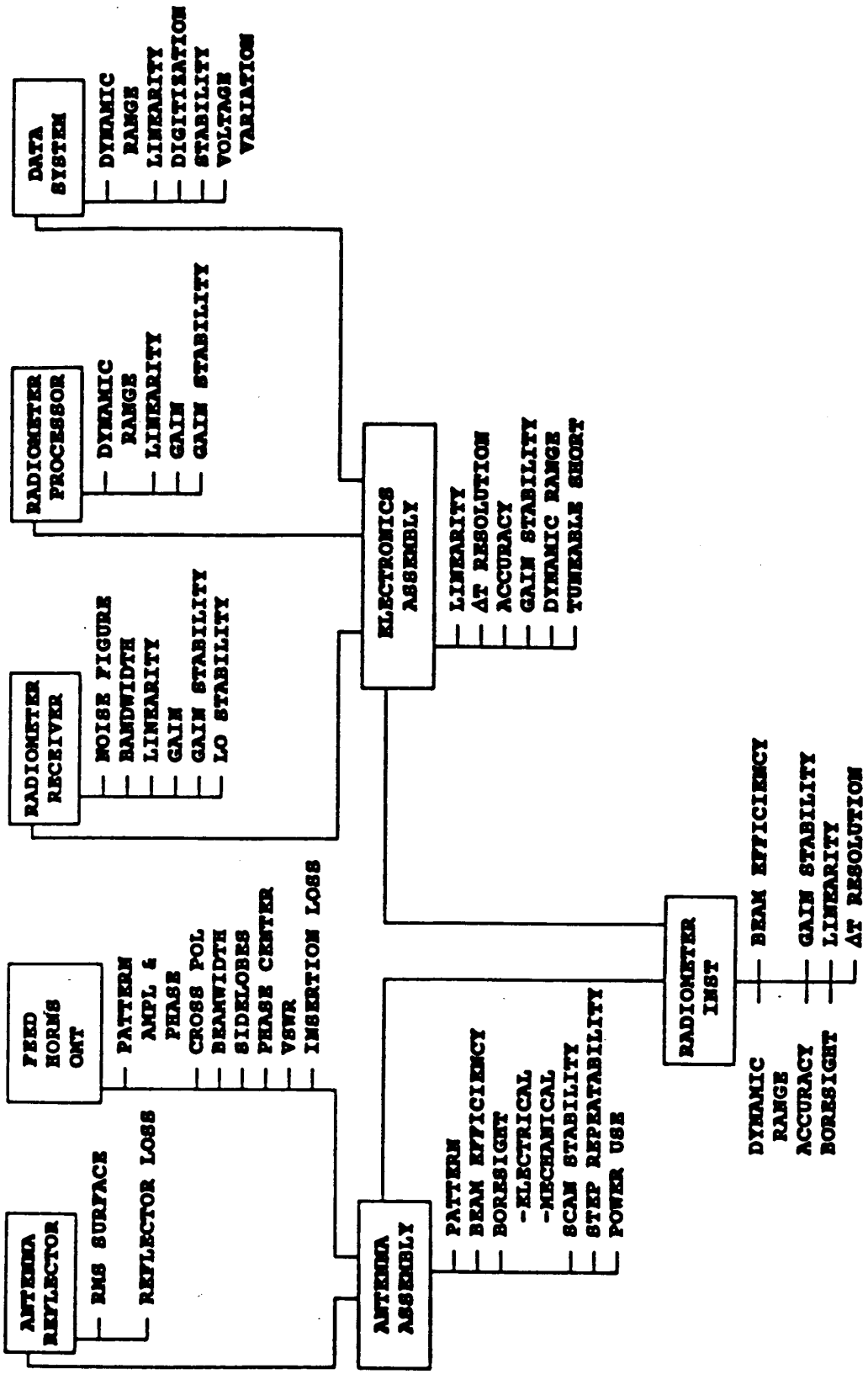

Figure 7. Radiometer Testing - General Philosophy

Check the POES Master Controlled Documents list at: http://poes.gsfc.nasa.gov/iso/baseline.pdf to verify that this is the correct version before use.

6.2.4 System Linearity

The system linearity requirements shall be demonstrated by laboratory tests similar to the preflight calibration test (see section 6.3). The external target test(s) shall cover the range of 84 K to 330 K. The contractor must use other substitution type tests and/or analyses to establish the linearity down to 3K.

6.2.5 Temperature Sensitivity -- NEΔT

The temperature sensitivities (NEΔT) shall be established using the following conditions:

(1) The antenna shall view a 300 K constant brightness temperature target.

(2) The bandwidth and integration time are the same as if the radiometer were in actual space operation.

(3) The "raw" data are reduced to temperature units using the same hot and cold on-board calibration targets and algorithm, except that a cryogenic target may be used to simulate the orbital cold target and the algorithm modified accordingly.

(4) Temperature sensitivity (NEΔT) is referred to the antenna aperture.

6.2.6 Antenna Pattern Measurements

The antenna radiation characteristics of each instrument shall be measured and fully documented by the contractor. The antenna system of the Engineering Model of the AMSU-A shall have at least the measurements delineated below. The Protoflight and all Flight model antenna systems shall have sufficient testing to demonstrate the uniformity of the antenna system characteristics. (Any design changes from the Engineering Model antenna system will require a full test series.)

6.2.6.1 Pattern Center Frequency -- The antenna patterns shall be measured at the center frequency of the pass-band of each channel for channel 1 through 8 and channel 15. For channels 9 through 14, only one frequency is required: 57290 MHz.

6.2.6.2 Dynamic Range and Amplitude Accuracy -- The minimum dynamic range of the antenna pattern measurement shall be 50 dB, and the amplitude accuracy shall be plus or minus 3% in dB values at the particular measurement point to dynamic range levels of 40 dB increasing linearly to ±5% at dynamic range levels of 50 dB.

6.2.6.3 Number of Planes -- At each frequency (section 6.2.6.1), a minimum of two "cuts" must be made to obtain radiation patterns. These "cuts" shall be the principal plane of the antenna (plane of symmetry of the antenna), and a plane 90° from the principal plane. All planes shall contain the antenna main beam axis.

Check the POES Master Controlled Documents list at: http://poes.gsfc.nasa.gov/iso/baseline.pdf to verify that this is the correct version before use.

6.2.6.4 Measurement Polarization -- For all channels, each "cut" shall be made at two polarizations: 0°, and 90° (Note: The 0° degree is parallel to the principal direction of polarization at the boresight (beam center) of the beam position in question.)

6.2.6.5 Angular Range and Interval -- Each pattern shall cover a total angular range of 360°, i.e., plus and minus 180° from boresight. The angular intervals shall be a maximum of one-fifteenth (1/15th) of the antenna HPBW, i.e., 0.22°.

6.2.6.6 Beam Positions Required -- The antenna pattern measurements shall be made at earth view beam positions 1, 15, and 30, and the primary cold calibration position.

6.2.6.7 Tuneable Short Test

EOS only -- The tuneable short test is required so as to bound the allowable contribution of LO leakage reflection. The pass/fail criteria is such that the greater the return loss of the antenna, the more LO leakage that can be tolerated so as to maintain a maximum 0.6K variation/error in the absolute calibration.

The pass/fail criteria shall be determined as follows:

Determine the “worst case” delta return loss using both the amplitude and phase of the return loss. To do this, the antenna reflection coefficient shall be measured at all beam positions including calibration positions. These measurements shall measure the amplitude and phase of the antenna reflection coefficient A_r.

Using the measurements of A_r, the actual value of A_r is most easily obtained by plotting the numerical values on a polar diagram. For example, given two measurements of amplitude, **(a)** [in dB relative to a short] and phase, θ, for the antenna, the numerical values $a = 10^{[a/20]}$ and would be plotted as below; then A_r is equal to one half the maximum value of b for any pair (i,j) of measurements.

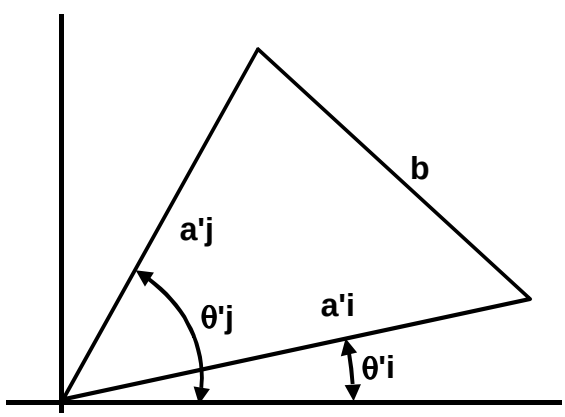

Check the POES Master Controlled Documents list at: http://poes.gsfc.nasa.gov/iso/baseline.pdf to verify that this is the correct version before use.

Utilizing the maximum value of b ("worst case") for any two measurements, the maximum allowable value for T_S shall be:

$T_S = 1.2/b$

6.2.6.7.1 Test Requirements

EOS PFM only -- All AMSU-A receivers shall undergo a tunable short test and the results fully documented by the contractor. The test shall include at least the following procedures:

(1) The antenna(s) (feed horn(s)) shall be replaced by a tunable short at an interface plane as close to the feed horn output as possible.

(2)..The short shall be moved at least one waveguide wavelength, stopping at a minimum of 10 positions.

(3) The short shall be positioned for maximum and minimum channel radiometric output.

(4) The test shall be performed at the nominal operation temperature.

(5) The peak-to-peak difference between the maximum and minimum output levels (in K units), for an acceptable unit, shall be dependent upon the worst case return-loss of the antenna system (measured at all beam positions; 30 earth scenes, 4 cold calibration and 1 warm calibration positions).

6.2.7 Results of Tests

The results of all tests delineated in this section shall be included in the test and calibration log book(s) to be delivered with each instrument.

6.2.8 Miscellaneous Test Requirements

6.2.8.1 Life Testing -- The contractor, with TO concurrence, shall identify those components and/or assemblies that should be life tested to insure confidence in their operation for the instrument life.

6.2.8.2 Spacecraft Integration Test -- The contractor shall define a functional test for the AMSU-A, using the STE, for use after delivery to the spacecraft contractor's facility. This test will be used after any storage period, prior to integration, and during spacecraft system level testing to insure that the instrument is performing satisfactorily.

Check the POES Master Controlled Documents list at: http://poes.gsfc.nasa.gov/iso/baseline.pdf to verify that this is the correct version before use.

6.3 SYSTEM CALIBRATION REQUIREMENTS

6.3.1 General

The determination of the system output versus scene brightness temperature of each channel will be the most comprehensive test of the system design and performance. This test must be capable of producing the information required to generate the calibration algorithm (section 3.5.2.3) necessary for processing the data gathered in orbit. It is also required that all temperature and voltage monitors be calibrated.

6.3.2 Results of Calibrations

The results of all tests and calibrations shall be summarized by the contractor in the calibration log book(s). The information listed below shall be derived from the calibration data:

(1) Temperature sensitivity (NEΔT) of each channel.

(2) Standard deviation of individual calibration points from the best fit calibration curves for each channel and each calibration.

(3) Calibration of in-flight calibration blackbodies in terms of effective brightness temperature versus temperature monitor bit outputs.

(4) Calibration curves of all thermistors.

(5) Calibration curves of all platinum temperature sensors.

(6) Calibration curves of all voltage monitors.

(7) Temperature stability data for the instrument.

(8) Beam profile in the far field for each channel.

6.3.3 System Calibration Test Requirements

6.3.3.1 General -- The system calibration test program shall produce the information required to evaluate the orbital measurement with a NEΔT precision equal to or better than the required values listed in Table 1.

The calibration environment for the instrument shall simulate the mission thermal radiation environment. The instrument shall be tested with its full complement of shields and insulation. Calibrations shall be made at selected instrument/spacecraft interface temperature, instrument internal operating temperature, and external (Earth view) calibration target temperature combinations listed in Table 2A. (The Earth target shall be cooled to 84 K at the start of the calibration run and stepped through the intermediate target temperatures to 330° before the

Check the POES Master Controlled Documents list at: http://poes.gsfc.nasa.gov/iso/baseline.pdf to verify that this is the correct version before use.

Table 2A. Calibration Test Parameters
(Instrument/Interface Temperature Combinations)

Combination	Instrument Internal Temperature	Interface Temperature
1	Projected High	Projected Nominal
2	Projected Midpoint between High and Nominal	Projected Nominal
3	Projected Nominal	Projected High
4	Projected Nominal	Projected Nominal
5	Projected Nominal	Projected Low
6	Projected Midpoint between Nominal and Low	Projected Nominal
7	Projected Low	Projected Nominal

interface/instrument test temperature combination is changed.) Calibration cycles shall be conducted as listed in Table 2B.

Table 2B. Calibration Test Parameters (Mod 50, 68)
(Test Matrix)

Target Temp	Temp. Combination							Special Tests
	1	2	3	4	5	6	7	
CYCLE #1								Primary PLLO (PLLO #1)
84	X			X			X	
105								
130	X			X			X	
155								
180	X			X			X	
205								
230	X			X			X	
255								
280	X			X			X	
305								
330	X			X			X	
84	X			X			X	Ant. On-Orbit Scan, Short Term Gain
Vary								
330								
305								
CYCLE #2								Redundant PLLO (PLLO #2)
84	X			X			X	
130	X			X			X	
180	X			X			X	
230	X			X			X	
280	X			X			X	
330	X			X			X	

Check the POES Master Controlled Documents list at: http://poes.gsfc.nasa.gov/iso/baseline.pdf to verify that this is the correct version before use.

A sufficient number of independent samples (not necessarily identical for all channels) shall be taken to assure an effective temperature sensitivity (standard deviation of the measured mean from the true mean) of 0.03 K or better (one-tenth the calibration repeatability requirement).

The target temperature shall be set to within ±1 K of its preselected value and stabilized sufficiently to meet the following target temperature requirements (the target temperature is determined from the mean of platinum sensors imbedded in it).

During the period that calibration data is taken, the indicated temperature change of each platinum sensor taken individually shall be less than 0.1 K. If <u>any</u> platinum sensor indicates a target temperature change in excess of 0.1 K, all data for that run will be discarded.

The instrument/spacecraft interface temperature shall be set to within ±1 K of its preselected value and stabilized sufficiently such that during the data run for any given target temperature if the interface temperature varies by more than ±1 K, all data for that run will be discarded.

The instrument internal temperature shall be taken at one point within the instrument where there is a flight temperature sensor. The temperature shall be set within ±1 K and stabilized sufficiently such that during the data run for any given target temperature, if the instrument internal temperature varies by more than ±1 K (controller cycling amplitude shall be ±0.5 K), all data for that run will be discarded.

6.3.3.2 <u>Special Test Requirements (Mod 50, 68)</u>

(1) Test cycles 1 and 2 shall include a test wherein the instrument antenna scan system is operated in the "on orbit full scan mode". This test shall be made at all test combinations with the Earth target at 84 K.

(2) The instrument shall be calibrated with both the primary and redundant Phase Lock Loop Oscillators (PLLO) operational. Primary PLLO shall be used during Cycle 1. Secondary PLLO shell be employed for the Cycle 2 test.

(3) The short term gain fluctuations (delta G over G) shall be determined for all channels utilizing the EOS PFM, instrument test temperature combination #4, test cycle #1 only, target temperature set at 330 K.

Check the POES Master Controlled Documents list at: http://poes.gsfc.nasa.gov/iso/baseline.pdf to verify that this is the correct version before use.

6.4 SYSTEM QUALIFICATION/ACCEPTANCE REQUIREMENTS

The contractor shall perform such tests as delineated in the PAR and Table 3 so to develop a high degree of confidence that the AMSU-A can perform its mission with a minimum risk of failure or out-of-tolerance operation. The engineering model shall be exposed to qualification level and qualification duration tests. The protoflight model is intended to be the first operational instrument and shall be exposed to qualification level and flight duration test. All "flight" models shall be exposed to flight level and duration tests. All qualification and/or acceptance testing shall be observed by the TO or his appointed representative. EMI/RFI testing of the Engineering and Protoflight Models shall be performed as per the Performance Assurance Requirements.

METSAT only -- EMI/RFI testing for the Flight Models shall be performed only at those frequencies delineated in the GIIS and the UIIS as affecting the Search and Rescue System. A full EMI/RFI test series shall be performed on the Flight Models if a design change is made from that as tested on a previous model.

EOS only -- EMI/RFI testing shall be as specified in the GIRD.

Table 3. Instrument Testing

PERFORMANCE TEST	EOS PFM	FM
Subassembly Function	X	X
Assembly Function	X	X
Module Function	X	X
Instrument Calibration	X	X
QUALIFICATION/ACCEPTANCE TEST	**EOS PFM**	**FM**
Thermal/Vacuum	X	X
Vibration/Acoustic	X	X
Momentum Compensation		X
EMI/RFI	X	X
Magnetic Field	X	X*
Acceleration	X	
Thermal Balance	X	X*

* First instrument of this series.

Check the POES Master Controlled Documents list at: http://poes.gsfc.nasa.gov/iso/baseline.pdf to verify that this is the correct version before use.

7.0 SOFTWARE REQUIREMENTS

7.1 GENERAL

EOS only -- The software shall be consistent with the EOS Software Acquisition Management Plan (422-10-04). All software shall be implemented in modular form with a descriptive functional title given to each module. All software modules shall be well commented. A comprehensive list of variables, parameter, constants, labels, and entry points with definitions shall be maintained for each module in a User's Guide. Flow charts, labeling description, and their documentation shall be maintained for each module. Software assurance requirements shall be in accordance with the PAR. The instrument flight software interfaces with the spacecraft shall be designed to be compatible with the capabilities described in the documents contained in Section 2. All software which is required for operation and calibration through EOSDIS shall be compatible with that facility.

7.2 INSTRUMENT FLIGHT SOFTWARE/FIRMWARE

EOS only -- The contractor shall design and provide in the instrument the capability to operate in the modes defined in Section 3.1.2.

7.3 IN-FLIGHT OPERATIONS SOFTWARE

EOS only -- The contractor shall provide software to accomplish the following on the STE; software for all items shall be in a higher order language which is transferable with minimal effort to EOSDIS:

(1) Instrument engineering and performance data analysis.

(2) Quick look engineering data analysis and display.

(3) Calibration. (Provide calibration algorithms and procedures.)

7.4 INSTRUMENT GROUND SOFTWARE

EOS only -- The contractor shall design and provide all ground support software necessary to operate, test, and calibrate the instrument at the contractor's facilities, and at NASA facilities using contractor-supplied GSE.

This software shall support instrument verification, integration, monitoring of performance, ground operations, as well as supporting evaluation of data acquired during S/C integration. Software that interfaces with the spacecraft contractor's test equipment shall be written in ESTOL.

Check the POES Master Controlled Documents list at: http://poes.gsfc.nasa.gov/iso/baseline.pdf to verify that this is the correct version before use.

7.5 COMMAND LIST AND DESCRIPTION

EOS only -- The contractor shall provide a Command List and Description document containing descriptions and lists of all commands and command sequences necessary for operation of the instrument, to enable EOSDIS to generate and validate commands for in-flight or ground operation.

7.6 SOFTWARE

METSAT only -- The contractor shall generate all required computer programs which will be used in the processing and interpretation of the test and calibration data. These shall include, but not necessarily be limited to the following: an instrument calibration program, a field-of-view program and a limits program.

Check the POES Master Controlled Documents list at: http://poes.gsfc.nasa.gov/iso/baseline.pdf to verify that this is the correct version before use.

APPENDIX - A: GLOSSARY OF TERMS/ACRONYMS

Check the POES Master Controlled Documents list at: http://poes.gsfc.nasa.gov/iso/baseline.pdf to verify that this is the correct version before use.

APPENDIX A

GLOSSARY OF TERMS/ACRONYMS LISTING

A/D	Analog/Digital
AIRS	Atmospheric Infrared Sounder
AMSU	Advanced Microwave Sounding Unit
C	Celsius
C&DH	Command and Data Handling
CCR	Configuration Change Request
CDR	Critical Design Review
CW	Clockwise
dB	Decibel
DC	Direct Current
DOD	Department of Defense
EIA	Electronic Industries Association
EMI	Electromagnetic Interference
EOS	Earth Observing System
EOSDIS	EOS Data Information System
FM	Flight Model
FOV	Field of View
GEVS	General Environmental Verification Specification
GHB	Goddard Handbook
GHz	Gigahertz
GIRD	General Interface Requirements Document
GIIS	General Interface Instrument Specification
GPS	Global Positioning System
GSE	Ground Support Equipment
GSFC	Goddard Space Flight Center
HPBW	Half-Power Beamwidth
Hz	Hertz
ICD	Interface Control Document
IDD	Interface Description Document
IF	Intermediate Frequency
K	Kelvin
kg	Kilogram
KHz	Kilohertz
km	Kilometer

Check the POES Master Controlled Documents list at: http://poes.gsfc.nasa.gov/iso/baseline.pdf to verify that this is the correct version before use.

GLOSSARY OF TERMS/ACRONYMS LISTING (Cont'd)

LO	Local Oscillator
LSB	Least Significant Bit
ma	Milliamperes
MHS	Microwave Humidity Sounder
MHz	Megahertz
MIL-STD	Military Standard
ms	Millisecond
NASA	National Aeronautics and Space Administration
NE?T	Noise Equivalent Temperature
NHB	NASA Handbook
NIST	National Institute of Standards and Technology
N-m-sec	Newton-meter-second
NOAA	National Oceanic and Atmospheric Administration
PAR	Performance Assurance Requirements
PDR	Preliminary Design Review
PFM	Protoflight Model
PPL	Preferred Parts List
RF	Radio Frequency
RFI	Radio Frequency Interference
RH	Relative Humidity
S/C	Spacecraft
SNR	Signal/Noise Ratio
STE	Special Test Equipment
TIROS	Television Infrared Operational Satellite
TO	Technical Officer
UIID	Unique Instrument Interface Document
UIIS	Unique Instrument Interface Specification
VDC	Volts - Direct Current
W	Watts

Check the POES Master Controlled Documents list at: http://poes.gsfc.nasa.gov/iso/baseline.pdf to verify that this is the correct version before use.

APPENDIX - B: DEVIATION/WAIVER TABLE

Check the POES Master Controlled Documents list at: http://poes.gsfc.nasa.gov/iso/baseline.pdf to verify that this is the correct version before use.

Table B-1. Deviation/Waiver Table

Waiver/ Deviation Number	CCR Number	Date Approved	Description	MOD Number	MOD Approved
	8125	12/23/98	The A1 EOS instrument does not meet the S-480-80 linearity requirements on eight channels.	74	
	8127A	05/05/99	The AMSU-A1 S/N 105 instrument does not meet the S-480-80 linearity requirements on nine channels.	92	03/05/02
	8129	08/12/99	The AMSU-A1 S/N 106 instrument does not meet the S-480-80 linearity requirements on nine channels.	92	03/05/02
	8130	08/12/99	The AMSU-A1 S/N 106 instrument does not meet the S-480-80 calibration repeatability requirement for channel 13 and 14.	92	03/05/02
	8131	10/21/99	The AMSU-A1 S/N 107 instrument does not meet the S-480-80 calibration accuracy requirement for the redundant PLO (PLO #2) channel 14 only at a scene target temperature of 330K and only at instrument cold temperature plateau.	92	03/05/02
	8132	10/21/99	The AMSU-A1 S/N 107 instrument does not meet the S-480-80 linearity requirements on nine channels.	92	03/05/02
	8134	05/21/00	The AMSU-A1 S/N 108 instrument does not meet the S-480-80 linearity requirements on nine channels.	92	03/05/02
	8136	09/02/00	The AMSU-A1 S/N 109 instrument does not meet the S-480-80 linearity requirements on nine channels.	92	03/05/02

Check the POES Master Controlled Documents list at: http://poes.gsfc.nasa.gov/iso/baseline.pdf to verify that this is the correct version before use.